Honeywell

TPE331 Pilot Tips

TPE 331 PILOT TIPS
TPTE33 (Series–1 through –15
Table of Contents

1 TPE331 INTRODUCTION
1.1 TPE331 Pilot Tips 1
1.2 Pilot Advisor Program....1
2 HISTORY
2.1 Honeywell 3
2.2 TPE Family 3
2.3 Honeywell Engines, Systems & Support 4
3 IMPORTANT NOTES....5
4 TPE331 DESCRIPTION
4.1 General....6
4.2 TPE Design 6
4.3 Operational Principle....7
4.4 Certification Considerations 8
4.5 Maintainability....8
4.6 Superior Installed Performance 8
4.7 Environmental 9
4.8 Advantages of Design Features....9
4.9 Power Management System 13
4.10 Operational Features 17
4.11 Systems 18
4.12 Major Options 24
5 TPE331 SPECS AND PERFORMANCE DATA
5.1 Weights and Dimensions....24
5.2 Ratings 26
5.3 Limitations....27
6 RECOMMENDED TPE331 OPS PROCEDURES....29
6.1 Normal Ops Procedures Checklist 30
6.2 Systems Check Procedures....51
6.3 Abnormal Ops Procedures 61
6.4 Engine Shutdown in Flight and Airstart Procedures 66
6.5 AvGas O.K. for Emergency Fueling....73
6.6 Maintenance Test Flight Procedures....73
6.7 Operational Suggestions 78
6.8 Servicing Information (Fuel/Oil) 82
7 TPE331 SUPPORT, SERVICE AND TRAINING
7.1 Commitment to the TPE331 Operator 83
7.2 AOG Emergency Service 84
7.3 Oils, Sils, and Pals....84
7.4 Pilot and Maintenance Training 85
8 GLOSSARY 91
9 INDEX 104

1 TPE331 INTRODUCTION

1.1 TPE331 PILOT TIPS

The information contained in this TPE331 Pilot Tips booklet exemplifies Honeywell's current recommendations, which may be beneficial for safe and efficient operations as well as lower cost of engine ownership. TPE331 Pilot Tips are a compilation of information provided during design, development, testing, certification and continuous product improvement activities. The final decision on whether or not to use this supplemental information is at the discretion of the Operations Manager, Chief Pilot or Pilot-in-Command, as applicable.

R E M E M B E R :
THE GOVERNMENT APPROVED AIRCRAFT FLIGHT MANUAL (AFM/POH) IS ALWAYS THE FINAL AUTHORITY FOR OPERATION OF THE AIRCRAFT AND ENGINE.

Through its customers support organization, service centers, transportation and engineering flight test activities, pilot contacts, technical representatives, and many other sources, Honeywell gathers information on the operation of its turboprop engines worldwide. This information is evaluated; and if an improvement or change in procedures is indicated, it is recommended to the airframe manufacturer for inclusion in the AFM/POH or other related manuals.

Additional information, suggestions and subjects for inclusion are earnestly solicited from you.

1.2 PILOT ADVISOR PROGRAM

The Pilot Advisor Program has been the focal point for the coordination and standardization of Honeywell Engines, Systems and Services operational recommendations. The Pilot Advisor team is responsible for passing on the operational procedures and techniques that the combined experience has demonstrated as safe, practical and in the best interest of overall engine performance and cost effectiveness. This communication process involves liaison with the various engineering disciplines within Honeywell, aircraft manufacturers and their associated training organizations and, most importantly, with the aviation community of owners, operators and crew members who directly utilize Honeywell's propulsion engines. For many years, Honeywell has offered the services of Pilot Advisors to work with owner/operators, aircraft manufacturers, service centers and training organizations.

Since the Pilot Advisor group is staffed by pilots, a cockpit perspective is maintained in all material and programs they produce such as the TPE331 Pilot Tips booklet, presentations at operator facilities, aviation workshops or symposia and various electronic media.

Chad Haring is the manager of Honeywell's Flight Test Operations and the Pilot Advisor Program. Chad's flying background includes turboprop, turbofan and helicopter over a wide variety of civil and military assignments. Chad can be reached at (602) 231-2474. E-mail: chad.haring@honeywell.com

Helmuth Eggeling flew fighter aircraft during his military career, with subsequent experience in corporate, airline and airfreight operations as line pilot, manager and business owner. Helmuth devotes a significant portion of his time working with Honeywell's regional airlines and individual customers operating TPE331, ALF502 and LF507 engines. Helmuth's phone number is (602) 231-2697. E-mail: helmuth.eggeling@honeywell.com

Burnie Rundall has a strong corporate aviation background, including extensive operational, management of operations and technical experience. Burnie's principle area of responsibility is with Honeywell's AS907, TFE731, CFE738 and ATF3 turbofan applications. Contact Burnie a s(602) 231-3321. E-mail: burnell.rundall@honeywell.com

Each of the Pilot Advisors participates regularly as crew members on Honeywell's flight test and transportation aircraft. To discuss an operational question, to offer a comment, or to arrange Pilot Advisor support for an operational forum, please contact:

Honeywell Engines, Systems & Services	
111 South 34th Street P.O. Box 52181 Phoenix, Arizona 85072-2181 ATTN: Pilot Advisor Group MS 33-15/129-33	Tele: (602) 231-2697 Fax: (602) 231-5289 Cell: (602) 363-9316 E-Mail: Helmuth.Eggeling@Honeywell.com

2 HISTORY

2.1 Honeywell

Creating the "Aircraft Tool & Supply Company" in Southern California during the mid 30's, John Clifford Garrett, a pioneer in turbo supercharging technology, envisioned his company as major contender in the turbine propulsion engine industry. However, before the first production TPE331 turboprop engine left the factory in 1963, "Garrett Supply", "AiResearch" and other branches, had diversified in aviation research, development, and manufacturing products to satisfy increasing demands on equipment improvement to achieve faster air speeds, higher altitudes and more air travel comfort.

Under Cliff Garrett's leadership, the company was responsible for many 'Firsts' in the aviation/space industry: first all-aluminum aircraft intercooler on the B-17, first volume production of cabin pressure regulators in 1941, first ram air turbine for aircraft emergency power, first light aircraft turboprop engine on the OV-10A in 1963 and the MU-2 in 1964, first gas turbine APU on passenger jets (Boeing 727), to mention only few examples.

The merger with the Signal Companies in 1964, followed by the mergers with Allied in late 1985 and on December 1, 1999 the European Commission granted clearance for the combination of Honeywell and AlliedSignal, which placed Honeywell International among the top U.S. industrial companies with worldwide aerospace product recognition.

2.2 TPE FAMILY

Historical evolution of the TPE family. [1]

Republic Helicopter conducted a series of successful test flights with a model 331 gas turbine engine as early as October 1961. Although the TSE331 was specifically designed to power helicopters, the 331 core became the basis for future TPE331 turboprop engines. On airplanes like the Beech 18 conversion, OV-10A, later the MU-2 and the Turbo Commander, the TPE gained international recognition as early as 1963 and consequently was selected to power Short's Skyvan. By the end of the 60's, Ed Swearingen selected the TPE331 to power his high speed and pressurized commuter airplane.

[1]Excerpts from: **Out of Thin Air: Garrett's first 50 years**, by William A. Schoneberger and Robert R.H. Scholl. The Garrett Corporation, 1985.

Originally designed as a 575 horsepower engine, engineering emphasizes that "it was not a scaled-down version of a large engine, as competitors were offering." Moreover, "building a small engine which runs at approximately 40,000 RPM is a specialized art, and the big engine manufacturers, whose products run from 11,000 - 13,000 RPM, cannot produce a successful small engine simply by scaling down design technique."

Present day TPE models evolved from a series of "pre-century" engines, for example the TPE331-25 for the MU-2 and Porter aircraft, -43 for the Turbo Commander, the -47 for the Turbo 18, and -55 for the DeHaviland Dove Turbo conversion; This series was followed by not less than a dozen "century series" TPE331 engines with many model modifications to meet the individual airframe requirements. With power ratings ranging from less than 600 shp to a thermodynamic rating of 1650 shp (compare Chapter 5.2, RATINGS), the TPE331 met the requirements of many different business or commuter type airplanes with seating capacities of up to thirty-one seats.

2.3 Honeywell Engines, Systems & Support

TEST FLIGHT FACILITY

Honeywell has maintained a small fleet of test aircraft at its Phoenix facility for many years.

Currently its two dedicated flight test aircraft are a Falcon 20 to test turbofan engines and a Boeing 720B to test turboprop and turbofan engines. Honeywell has also used prototype vehicles previously operated by aircraft manufacturers for certification. Often they have special wiring provisions, which facilitate installation of engine test instrumentation, recording equipment and telemetry.

Flight test aircraft are fitted with test engines and subjected to extensive operation through the entire flight envelope to verify operational characteristics and performance as defined by the engine specification. This can only be accomplished in flight, where simultaneous pitch, roll and yaw variations can be imposed on the engine during steady state operation and thrust lever transients.

Hundreds of instrumentation pickups in the test engine sense and transmit the data to onboard recording equipment. Simultaneously, the same data is transmitted to databases on the ground via telemetry.

3 IMPORTANT NOTES

NOTE

THESE PILOT TIPS SERVE AS SUPPLEMENTARY INFORMATION ONLY. DESCRIPTIONS AND OPERATIONAL PROCEDURES ARE GENERIC IN CHARACTER AND MAY NOT COMPLETELY REPRESENT A SPECIFIC ENGINE INSTALLATION. THEREFORE, THE AFM[2] IS ALWAYS THE FINAL AUTHORITY FOR OPERATION OF THE AIRCRAFT AND THE ENGINES.

[2] AFM (Aircraft Flight Manual) is the most commonly used term describing officially approved pilot handbook for a specific aircraft make/model. Other terms are Crew Manual, MOM (Manufacturer's Operating Manual), POH (Pilot's Operating Handbook), POH (Pilot's Operating Manual), and other.

4 TPE331 DESCRIPTION

4.1 GENERAL

The type (model) selection of an aircraft engine is often influenced by the high cost of fuel. At low to medium airspeed (ca. 375 mph), turbine powered propellers produce thrust more efficiently than any other propulsion system.

4.2 TPE331 DESIGN

The TPE331, a lightweight single-shaft turboprop engine, meets the market demands for efficient and compact turboprop engines. Like the reciprocating engine, immediate propeller thrust is available with the added bonus of jet thrust due to the flow-through design.

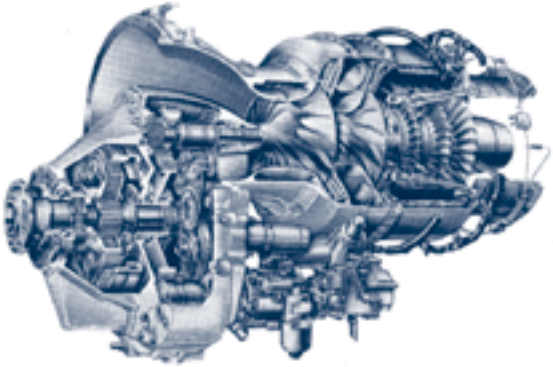

TPE331-12 Cross-Section

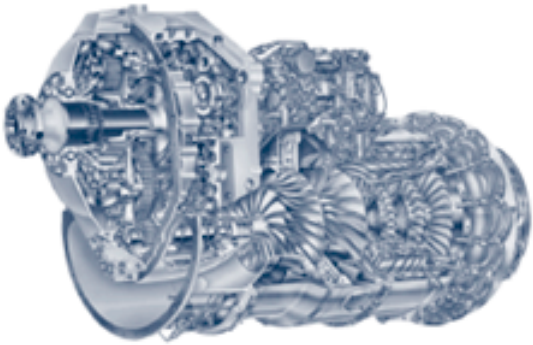

TPE31-14/-15 Cross-Section

4.3 OPERATIONAL PRINCIPLE

The TPE331 is a torque-producing engine. It extracts power by converting heat energy[3] into rotating mechanical energy (torque). Ambient air is drawn in and compressed by a two-stage centrifugal compressor. Exiting the 2nd stage diffuser, air is directed into the annular combustion chamber and mixed with fuel. The fuel/air mixture is ignited and a continuous combustion is maintained. The expanding gases enter the turbine nozzle area, experiencing further flow acceleration due to the convergent turbine nozzle design. Nozzle directed airflow impinges upon the first stage turbine rotor, causing it to rotate. The hot gases continue their flow through the remaining nozzles and turbine rotors, and finally back to the atmosphere as exhaust.

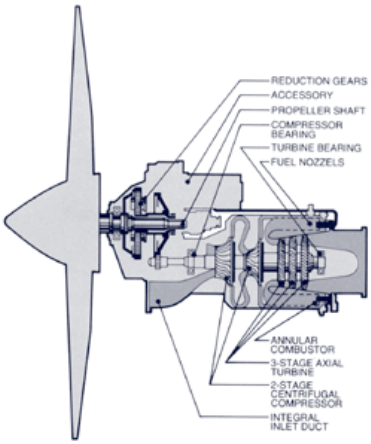

TPE331 Engine Components

Rotational turbine motion is transmitted to the compressor section and the gearbox through a common fixed shaft. Approximately 2/3 of the mechanical shaft power produced by the gas generator[4] is used to rotate (drive) the compressor. The gearbox converts the remaining high speed/low torque energy into low speed/high torque energy needed to drive the propeller and engine accessories.

[3] Heat energy is released by combining pneumatic energy (compressed air) with chemical energy (atomized fuel) and igniting this air/fuel mixture.

[4] The gas generator consists of the compressor, combustor, and turbine section.

4.4 CERTIFICATION CONSIDERATIONS

The TPE331 design provides the safety features and design specifications for transport category aircraft certification requirements i.a.w. Title 14 CFR Part 25. This includes Negative Torque Sensing (NTS) to automatically decrease propeller drag in the event of fuel starvation or engine shutdown[5].

4.5 MAINTAINABILITY

Design simplicity provides for low periodic maintenance costs of the entire line of TPE331 engines. With only one main rotating assembly, extended operational periods between overhaul have been realized. TBO as high as 9000 hours have been approved on engines in airline operations and a mean time between in flight shut down of more than 63,000 hours has been attained.

Dynamic balance of individual rotating elements prior to final assembly results in smooth, vibration-free operation and allows "in-the-field" replacement of individual rotating components.

The TPE331-14/-15 engine modular design permits disassembly of all major sections of the engine if proper tools are available. Inspection of each module at specified interval, with component parts replacement or repair as required, assures a high degree of reliability with minimal operator inconvenience and cost.

4.6 SUPERIOR INSTALLED PERFORMANCE

Rated performance of an uninstalled engine is only part of the TPE331 performance story. What really counts is engine horsepower when installed in the airframe. The high propulsion efficiency obtained from the "front-to-rear-flow" TPE design also provides some exhaust jet thrust and one of the highest ram pressure recovery in this turbo-prop engine class. Low frontal areas and compact dimensions reduce installation drag to a minimum.

[5]See also chapter 4.10, Operational Features.

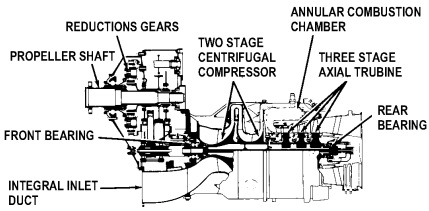

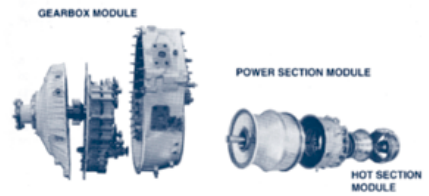

TPE331-14/-15
Cross section and modular construction

4.7 ENVIRONMENTAL

The annular reverse flow combustor of the TPE331 essentially eliminates visible smoke emission. With axial fuel injection, compressor air swirl provides a more homogeneous fuel-air mixture in the primary zone; minimizes oxygen deficient areas and results in a clean burning, fuel-efficient engine.

4.8 ADVANTAGES OF DESIGN FEATURES

CENTRIFUGAL COMPRESSOR. The two-stage centrifugal compressor converts mechanical energy into pneumatic energy.

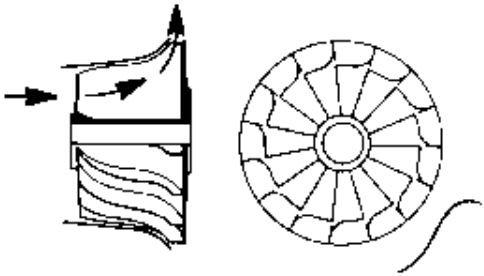

Centrifugal compression airflow pattern

COMPRESSION RATIO. Higher pressure rise per stage associated with a better compression efficiency over a wide rotational speed range (from idle to full power) clearly characterize the important advantages of the Centrifugal Compressor as compared to an axial flow type compressor[6]. For example, the TPE331 requires only two compressor stages to achieve up to 11.4:1 compression ratio with a total air mass flow of up to approximately 12 pounds per second at sea level on a standard day.[7]

F.O.D. RESISTANCE. Unlike axial flow compressors used in similar power class turboprop engines, the TPE331 has been proven to be highly resistant to F.O.D. without inlet screens and/or foreign objects separator ducts[8]. Moreover, most large foreign objects are rejected at the first stage compressor face due to the high impeller speed and centrifugal airflow geometry, and without significant performance degradation.

OTHER additional noteworthy advantages of the centrifugal compressors are:

- Simplicity and low cost of manufacture
- Low weight
- Shorter overall length
- Compressor stall resistance

TURBINE SECTION. The three-stage axial turbine section converts thermal energy to mechanical energy.

GEAR REDUCTION SECTION (GEAR BOX). The gearbox converts the high speed relatively low torque from the gas generator, to a lower speed with a higher torque value at the propeller shaft.

[6]Axial compressors often require automatic air bleed to eliminate compressor stall during acceleration from low engine speeds.

[7]TPE331-14; small block engines up to 10:1 compression ratio and approximately 7.6 pounds per second on a standard day at sea level.

[8]Engine designs that require inertia separators and inlet screens to protect against foreign object ingestion typically suffer performance degradation.

Advantages of the Single-Shaft Engine.

Although a free turbine offers several design advantages, a single-shaft engine relates more closely to the pilot's needs by providing instantaneous power response. This responsiveness gives an extra margin of safety in all flight modes from flight idle to full power.

For example:

CONTROLLED DESCENTS. Positive direct/single shaft governing prevents windmilling overspeed and provides superior propeller braking effects at or near flight idle. Consequently, as a precautionary or as an emergency action[9], the pilot can maintain high rates of descents at low airspeed[10].

RAPID REVERSE THRUST. Fast and positive propeller reversing is a consequential bonus of the single (fixed) shaft engine design. ON THE GROUND, with the PL in the reverse range, the pilot gains an extra measure of control, especially during a landing roll or during an aborted takeoff roll on short, high, hot, wet, and/or icy runways.

USING FULL REVERSE IS TYPICALLY NOT REQUIRED. FULL REVERSE TENDS TO INCREASE THE AMOUNT OF MATERIAL INGESTED AND CONTRIBUTES TO HIGHER RATES OF PROPELLER EROSION (REFER TO AFM/POH).

[9]That is, avoiding IMC or simply executing a jet type penetration to conserve fuel.

[10]At high cruising flight levels, the loss of cabin pressurization or other situations requiring an immediate high rate of descent, are preferably conducted at low airspeed in observance of Vne and/or Va when penetrating areas of light to severe turbulence (not to mention unanticipated extreme turbulence).

AIRFLOW STATIONS

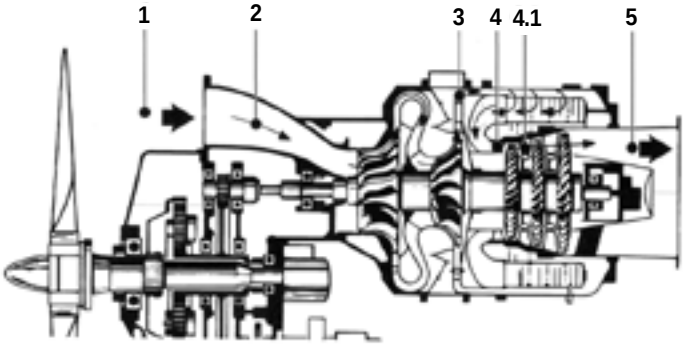

1 - Ambient (air surrounding the engine)
2 - Compressor Inlet (inlet to the first stage compressor)
3 - Compressor Discharge (area of highest pressure within the engine)
4 - Turbine Inlet (area of highest temperature within the turbine section)
4.1 - Interstage Turbine (inlet to the second stage turbine stator)
5 - Exhaust (turbine discharge)

4.9 POWER MANAGEMENT SYSTEM

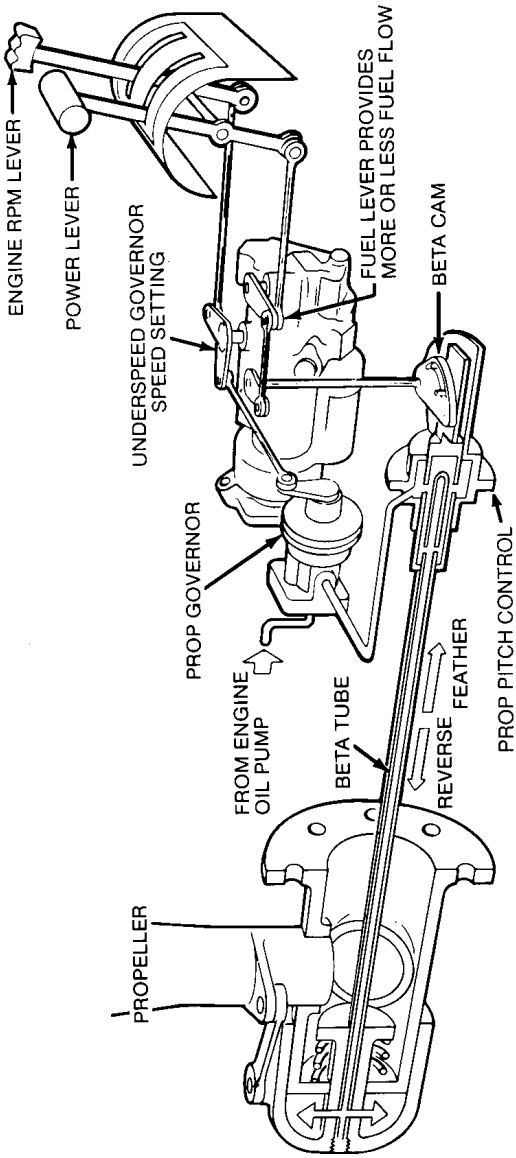

General description. Turbine engines achieve their highest efficiency at or near the RPM design point. Therefore, the TPE331 has been designed to operate at a specific RPM, depending on the specific operation.

Power management is that function which maintains a constant speed by controlling the excess of the turbine power[11] to equal propeller load.

A hydraulically actuated, constant speed, full feathering propeller control system is an integral feature of the engine. The Propeller Governing System incorporates an NTS System and is interconnected with the Fuel Control System.

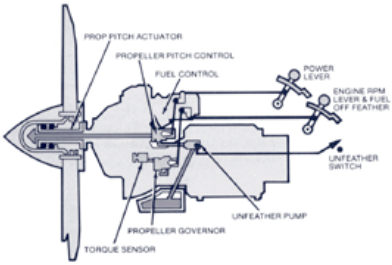

Engine Systems

During flight, the Propeller Governing System automatically maintains set engine speed by varying the pitch of the propeller blades in response to changing conditions of flight.

Should the system sense a negative torque, the feather valve will operate automatically and bring the prop blades toward feather in order to reduce drag[12]. However, when full feathering is required, the feather valve can be manually activated, causing the prop blades to assume a fully feathered, lowest drag, position. Also, IEC (Integrated Electronic Control) equipped TPE331-14 GR/HR engines provide an automatic feathering system in the event that a re-light is not obtained by the time the failing engine has dropped to 80 percent RPM, provided the APR/AWI switch is in the ARMED position and the condition levers are set high.[13]

[11]Approximately 2/3 of the power produced is used to drive the compressor and 1/3 is excess (useful) turbine power.
[12]Known as NTS-ing (Negative Torque Sensing).
[13]-14GR/HR IEC logic prevents engine opposite of failed engine from being feathered.

After landing, manual (Beta) control of the propeller blade angle is available, providing flat pitch (high drag) or reverse thrust to assist in deceleration as well as blade angle control to aid directional control.
Controls (typical).

The TPE331 is a pilot's engine; it is simple to operate and easy to manage. Unlike other engine makes, which require the manipulation of three and even four power management controls (levers), the TPE331 engine has only two: a Power Lever and a Speed Lever.

The Power Lever of the TPE-331 engine is "primarily used to control output power. Whether it be fuel or torque depends upon the MODE of operation."[14] That is, when advanced forward from the flight idle gate, the Power Lever controls fuel flow, similar to a reciprocating engine throttle. During this mode, the propeller governor automatically maintains set engine speed by varying propeller blade angles in response to changing flight conditions and/or power. On the ground (only), the Power Lever, when retarded behind the flight idle gate, controls propeller blade angle directly.[15] This MODE, power lever range from flight idle to reverse, is called "BETA MODE". During BETA MODE of operation, the USFG[16] maintains selected engine speed by assuming control over fuel flow (Wf).

WARNING

IN-FLIGHT BETA-MODE (PL BEHIND FI)[17] IS PROHIBITED.[18]

The use of beta-mode in-flight is prohibited because placing one or more power levers below the FI gate sets the corresponding propeller blades at an angle lower than certified for in-flight conditions. Moreover, setting one or more PL's below FI in-flight produces high drag conditions (resulting in an excessive airspeed deceleration), may induce an uncontrollable roll rate (due to asymmetric thrust and drag), and could block elevator airflow, which would inhibit stall avoidance and recovery.

[14]TPE-331 Training Guide, TSG-134, published 1-1-89, page 2-2.
[15]Some TPE331 powered single engine aircraft have in-flight BETA for high rates of descent at low airspeed. CONSULT AFM/POH FOR DETAILS.
[16]Underspeed Fuel Governor.
[17]PL = Power Lever, FI = Flight Idle
[18]unless the airplane is certified for In-Flight Beta-Mode.

Refer also to Pilot Advisory Letter: PA 331-06, August 5, 1996 for a detailed description of why In-flight Beta-Mode is prohibited.

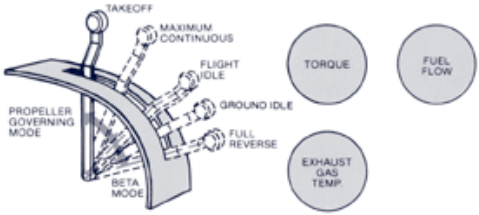

Power Lever

> **NOTE**
>
> **AFTER LANDING A GROUND IDLE (GI) MARKING IN THE QUADRANT IS VERY HELPFUL IN POSITIONING THE POWER LEVER FOR ZERO THRUST PLUS AIRBRAKING DUE TO PROP LOW PITCH BLADE ANGLE.**

Speed Lever (SL), sometimes called the Condition Lever[19] (CL) or RPM-Lever, basically serves one function; to select the engine operating speed. Normal Speed Lever positions are: High, Cruise, and Low. The RPM selected is according to the flight or ground condition, and once set, requires resetting only when the flight condition changes. High (100%) RPM is used for takeoff and landing, Cruise (96-97%) RPM for normal climb/cruise/descent operations, and Low (65-73%) RPM for engine starting and ground or taxi operations.

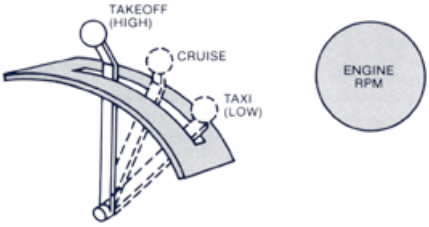

[19]Called "Condition Lever" (see Glossary) when linked to the manual feather valve and fuel solenoid manual shut off lever.

Speed Lever

Engine Instruments (typical)

TORQUE is measured as “foot pounds”, “percent of torque”, “PSI” pounds per square inch or as “horse power”, depending on the instrument design. Torque indication is representative of power being produced by the engine and is measured on the torsion shaft at the point where power is transmitted to the gearbox. TPE331-5A, -10UG, -11, -12, -14 and -15 engines employ a strain gage torque sensing system, offering improved accuracy and reliability.

TURBINE TEMPERATURE (EGT / ITT / %) Calibrated in degrees Celsius or as a percentage of maximum and is measured either at the second stage turbine stator (ITT), or in the engine tail pipe (EGT). This instrument represents a compensated value, which correlates to actual TIT (Turbine Inlet Temperature). (See also chapter 4.11)

FUEL FLOW, calibrated in lbs. per hour, is monitored during engine start, used as a crosscheck instrument in flight and for computing fuel consumption.

RPM INDICATOR is calibrated in percent, with 100% ALWAYS USED FOR TAKEOFF AND LANDING. Reduced RPM is typically used for taxi, climb, cruise, and descent, as authorized by the aircraft flight manual.

OIL PRESSURE and TEMPERATURE are normally calibrated in PSI and degrees centigrade respectively.

4.10 OPERATIONAL FEATURES

Operating Economy

When compared with reciprocating engines, the operators of the TPE331 enjoy an important cost effectiveness, in that lower cost jet-fuels can be used. In addition, the Time Between Overhaul (TBO) potential exceeds the reciprocating engine by a wide margin, and the cost per mile is favorable due to increased air speed and higher operating altitude.

Simplified single-engine procedures

In case of fuel or air starvation (flame-out) or an in-flight engine shutdown, the NTS (Negative Torque Sensing) system modulates the blade angle so as to maintain a minimum drag condition. Although this system is not an Auto-feather system, drag is reduced and the pilot has more time to assess and control the situation. Full feather can be selected when desired. Air starts are

just as simple. The propeller is unfeathered and the engine restarted as engine speed is increased by the windmilling propeller. No in-flight engine starter cranking is required, and only a few amps are necessary to operate the unfeathering pump (See AIRSTART in Section 6.3, Abnormal Ops Procedures).

Variable RPM Cruise

Selective engine speeds provide extended cruise range at decreased fuel flow and noise levels.

4.11 SYSTEMS

Electronic Engine Control (EEC)

The Electronic Engine Control (EEC), featured on the TPE331-8 and -12B engines, controls engine power and speed by electronically managing fuel flow and propeller governor speed. In the "NORMAL" mode, the EEC provides for automatic speed switch sequencing, automatic SFE, SRL function and EGT limiting above 80% RPM, automatic torque limiting, and fault monitoring.

Integrated Electronic Control (IEC)

TPE331-14 and -15 engines feature an engine control system with indication and data logging functions. The system includes auto start sequence, Start Fuel Enrichment, turbine temperature computation and display, automatic torque bridge backup selection in the event of primary bridge failure, and automatic torque and temperature limiting. An attached Personality Module (PM) provides for storage of unique engine calibration values, data logging, and fault information.

Digital Electronic Engine Control (DEEC)

Future engine controls will incorporate digital technology.

Turbine Gas Temperature Indication Systems

In contrast to the ITT indicating system, engine mass flow and ambient conditions affect EGT. Therefore, the pilot must use an 'EGT Correction Chart' to determine the maximum allowable turbine temperature for a given engine RPM, pressure altitude, outside air temperature, and/or calibrated airspeed.

Single Redline (SRL) indication provides a single turbine temperature (EGT) limit for all RPM and power conditions. This feature decreases pilot workload and is offered on models of the TPE331-8, -10 (except -10UA,-10P,-10T), -11 and -12.

Variable Redline (VRL) is offered on the TPE331-14 and -15 models. VRL provides a continuous display of engine temperature (EGT) limits based on altitude, airspeed, OAT and engine RPM.

These features (SRL & VRL) allow engine power optimization for variable flight conditions and combined with torque and temperature limiting (TTL) permits optimum aircraft performance within engine operational limits.

Engine Performance Augmentation Systems

Automatic Performance Reserve (APR). When the system is armed, APR will automatically increase performance of either engine in the event of a significant loss of torque on the opposite engine. Performance increase is obtained by simultaneously activating the enrichment valve (increasing fuel flow) and energizing the auxiliary EGT compensator to adjust EGT limit to a higher value.[20] (See table next page)

Continuous Performance Reserve (CPR). In the event of an engine failure, water injection systems, when installed, boost power on the opposite engine, have a limited quantity of Water-methanol (typically 5 minutes). After exhausting the water, pilots can augment engine power by manually switching from "Water Adder" to "CPR", if desired. CPR logic will increase the VRL redline and simultaneously modulate the enrichment torque motor to attain the higher EGT limit. (See table next page)

Water-Methanol Injection System. Can be used to a) recover lagging torque, resulting from unfavorable ambient conditions[21] and b), in the event of an engine failure on take-off or landing, to augment power on the opposite engine. Injected water-methanol increases compression / mass flow and lowers combustion temperature, permitting additional fuel flow to increase power (torque).

[20]Depending on installation, SRL generated EGT indication may be 19 or 26 degrees C lower than actual; whereas VRL indicators will increase the redline by 38 degrees C.

[21]For example, high ambient temperatures and/or high altitude airport elevations.

During water-methanol injection, maximum allowable interstage turbine temperature (ITT) may be increased from 923 to 944 degrees C for 5 minutes maximum. Only on TPE331-10UA engines, an additional 32 degrees C EGT is available to boost engine performance in emergencies. SRL controlled systems, on the other hand, correct the calculated temperature output by 12 to 36 degrees, ensuring a constant single redline indication (650 degrees C max) during water injection mode while keeping actual turbine temperatures within design limits. Finally, VRL systems automatically decrease the EGT redline by 6 to 18 degrees C, depending upon the ambient conditions. (See table below)

Turbine Temperature Indication Adjustment
with
Augmentation System Activated

Turbine temperature indicator adjustment in degrees C:

	Automatically conditions adjusts		Maximum Compensated	
System	S R L	V R L	E G T	I T T
APR	-19/-26 [22]	+38	NA	NA
CPR	NA	+21	NA	NA
Water [23]	+12 to +36	-6 to -18	[24]	944/5 minutes

[22]Depending on installation
[23]Depending on ambient condition
[24]TPE331-10UA: An auxiliary compensator reduces actual EGT to 32 degrees C less than indicated.

Lube System, TPE331 -1 through –12

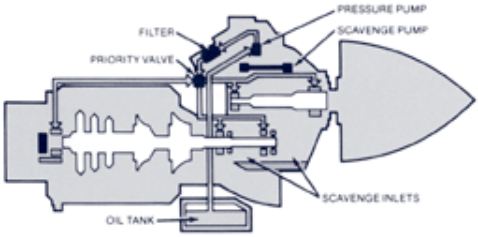

Regulated Oil System

A dry sump high pressure, regulated oil system is provided to lubricate and cool the compressor and turbine bearings and the reduction gearing. The system supplies oil to the propeller control system and to the torque sensing[25] components. Included in the system are a high-pressure pump, three scavenge pumps, an oil filter with a bypass valve, a pressure regulator and oil tank. Also included is an oil temperature bulb and magnetic chip detector.

Lube System, TPE331-14A/B/F and -15AW

A dry sump, non-regulated lubricating system provides the same features as described in the -1/-12 family. In addition, the non-regulated system provides improved system reliability, improved failure detection, lower weight and power requirements, and improved cold starting characteristics. The system is pressurized at the oil tank by a pressurizing valve to maintain ideal lubrication pump efficiency at high altitudes.

Non-regulated Lube System

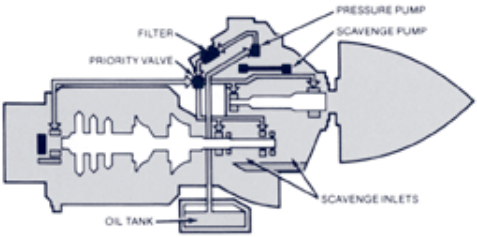

[25]Later model engines utilize a strain gage torque sensor.

Lube System, TPE331-14GR/HR

This dry sump, a regulated and filtered system lubricates and cools engine bearings, reduction gears, and accessory drive trains. The system incorporates a priority/regulator valve that gives lubrication priority to the compressor and turbine hydraulic bearing mounts during engine starting. The regulator function maintains a system pressure between 45 to 60 PSIG. Also included in the system is a chip detector, three internal scavenge pumps, an oil filter with filter bypass valve/indicator, over pressure relief valve, and a fuel heat exchanger. Finally, the system also supplies oil to the negative torque sensing and propeller control system.

Fuel System

The engine fuel system is relatively simple in design. Its purpose is to pressurize, control and atomize the fuel into the combustion chamber to

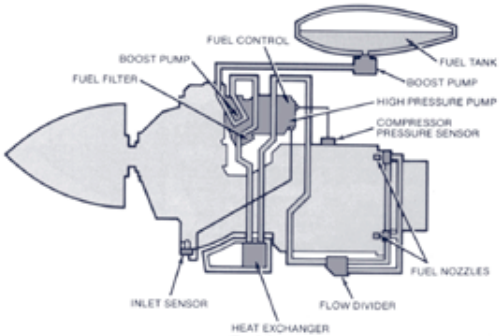

Fuel System

satisfy the speed and power demands on the engine. The system includes an engine driven fuel pump, a fuel control assembly, fuel shut-off valve, flow divider valve, fuel nozzle and manifold assembly and oil to fuel heat exchanger. The system automatically controls fuel flow for variations in power lever position, compressor discharge pressure (P3) and inlet temperature and pressure conditions. The fuel shut-off valve is electrically actuated during the start cycle and upon engine shutdown and can be closed manually by actuating the fuel shutoff or feather handle. TPE331-8/-10N and -14/-15 engine designs incorporate the fuel shut-off valve within the FCU.

The oil fuel heat exchanger, incorporated within the oil tank, on some applications, is a counter-flow system, which warms the fuel to prevent fuel filter icing. A flow divider is incorporated to deliver regulated fuel flow to the primary and secondary fuel manifolds and nozzles for proper fuel spray characteristics. The TPE331-14/-15 family of engines includes an added motive flow feature at the fuel pump output for aircraft fuel boost pump drive options and a separate manual fuel shutoff valve.

Ignition Systems

The TPE331 utilizes a high energy capacitance discharge type ignition system with varying spark rates; spark rates are dependent on input volts, ranging from 10 to 30 VDC[26] and/or up to 40 VDC for 10 seconds when performing series battery starts.

Individual airframe applications offer varying ignition mode systems. Typically, the three types of ignition modes are:

NORMAL: providing ignition from 10 percent RPM to starter cutout. and/or

MANUAL/CONTINUOUS: if applicable, can be selected at any time; for example when operating in potential icing conditions[27] or when delaying ignition during high residual turbine temperature engine starts and/or

AUTOMATIC/AUTO-RELIGHT: a system which automatically triggers a spark and re-ignition in the event of a negative torque or decaying RPM condition in flight. The auto-ignition system is self de-activating as engine operation returns to normal.

[26]As voltage input increases, spark rate increases. At 13 VDC about one spark per second and at 28 VDC two sparks per second will be generated.

[27]Refer also to Abnormal Procedures – Operations in Icing Conditions.

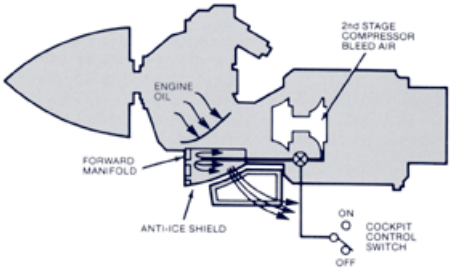

Anti-Icing System

An electrically actuated system controlled by the pilot employs warm bleed-air from the second stage compressor[28]. This air is directed to a forward manifold and anti-icing shield surrounding the air inlet. It then flows rearward across the outer surface of the gearbox air inlet and exits into the engine nacelle. In addition, the opposite portion of the inlet is part of the gearbox case and, as such, is directly warmed by engine oil.

4.12 MAJOR OPTIONS

Major options include a torque and/or temperature limiting system that simplifies pilot monitoring and results in longer life of components. Other options include “inlet up” or “inlet down”, as well as major elements of the oil system, external to the engine, such as oil tanks and appropriate heat exchangers. A variety of power management systems are also available to optimize and simplify engine operation to fit specific mission requirements.

5 TPE331 SPECS AND PERFORMANCE DATA

5.1 WEIGHTS AND DIMENSIONS

Description: Single-shaft turboprop engine with integral gearbox, two-stage centrifugal compressor, three-stage axial turbine, and a single annular combustion chamber.

[28]P3 bleed air.

TPE331-1 through -12 FAMILY

Basic Weight:	335 to 400 lbs.
Approx. Dimensions:	Length 45 in.; Width 20 in.; Height 26 in.
Prop Shaft RPM:	CW[29] 2000 or CCW[30] 1591 RPM @ 100% turbine shaft RPM
Turbine Shaft RPM:	41,730 @ 100% RPM

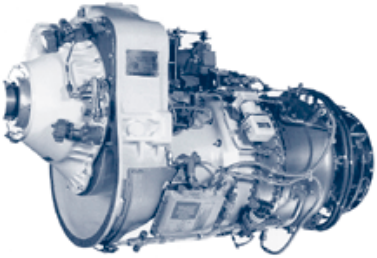

TPE331-1 through -12

TPE331-14/15 FAMILY

Basic Weight:	581 to 629 lbs.
Approx. Dimensions:	Length 53 in.; Width 24 in.; Height 34 in.
Prop Shaft RPM:	1540, 1391 (1552 -14GR/HR) RPM @ 100% turbine shaft RPM.
Turbine Shaft RPM: (at 100% RPM)	CW prop rotation: 34,904 (-14GR: 35,645) CCW prop rotation: 34,941 (-14HR: 35,585)

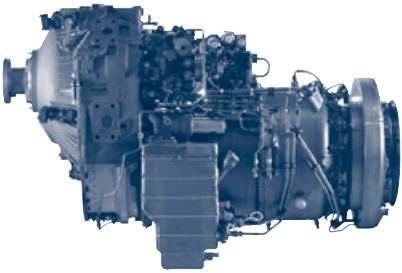

TPE331-14/15

[29]CW = clockwise as seen from the rear of the aircraft looking forward
[30]CCW = Counter clockwise as seen from the rear of the aircraft looking forward.

5.2 RATINGS [31]

NOTE

THE FOLLOWING (2) TABLES CONTAIN ONLY THE MAIN GROUPS OF ALL TYPE-CERTIFICATED TPE331 ENGINE MODELS. THERE ARE MANY MORE SUBGROUPINGS, WHICH ARE NOT LISTED. FOR RATINGS ON SPECIFIC MODELS NOT LISTED HEREIN, PLEASE CONTACT YOUR HONEYWELL AUTHORIZED SERVICE CENTER OR THE HONEYWELL PILOT ADVISOR GROUP.

HONEYWELL TPE331 RATINGS

	Max Cont SHP	Takeoff SHP (5 min.)		SFC (LB/HP/HR)
TPE331 Model		(Dry)	(Wet)	
-1 and –2	715	715	(NA)	.571
-3,-3U,-3UW,3W,-10UA	840	840	940	.548 [32]
-5,-5B,-5U,-10P,-10T	776	776	776	.570
-5A	776	776	840	.570
-6	715	750	(NA)	.570
-8	715	715	(NA)	.570
-10 (except -10UA)	900	940 [33]	940	.550
-11	1000	1000	1100	.530
-12B	1100	1100	(NA)	.520
-12UA/UAR	1050	1100	1100	.520
-14A/B	1250	1250	(NA)	.515
-14GR/HR	1650	1650	1650 [34]	.510
-15	1645	1645	1645	.515

[31] A specific application may be "Flat Rated" at a lower SHP value (see AFM/POH). All listed Performance Ratings are at U.S. Standard Atmosphere, sea level and static conditions without considerations of individual installation losses, including inlet recovery, exhaust losses, bleed flows, and accessory loads.

[32] -10UA SFC .558

[33] Some applications have APR (see AFM/POH). APR is for emergency use only; each use counts for four (4) engine cycles.

[34] -14GR/HR with APR has a 5 minutes maximum limit with CPR see AFM/POH.

5.3 LIMITATIONS

MAXIMUM START AND TAKEOFF TURBINE TEMPERATURES

	Start		Takeoff	
TPE331 Model	EGT	ITT	EGT	ITT
-1 and –2	815º C	---	AFM/POH	---
-3,-3U,-3UW,-3W	---	1149º C	---	923º C
-5, -5A, -6	---	1149º C	---	923º C
-8	770º C	---	450º C[35]	---
-10UA,-10P,-10T	770º C	---	AFM/POH	---
-10 (except -10UA)	770º C	---	650º C	---
-11, -12B, -12UA/UAR	770º C	---	650º C	---
-14A/B, -14GR/HR, -15	770º C	---	Variable[36]	---

NOTE

THE ACTIVATION OF AUGMENTATION SYSTEMS, FOR EXAMPLE APR, CPR, OR WATER-METHANOL INJECTION, WILL EITHER ADJUST OR OTHERWISE MODIFY MAXIMUM ALLOWABLE TURBINE TEMPERATURE INDICATION; CONSULT THE APPLICABLE AFM/POH FOR DETAILS. (See also "Engine Performance Augmentation Systems", Chapter 4.11)

MAXIMUM ENGINE OPERATING RPM LIMITATIONS

Condition (Engine RPM in %)	Operating Limits
100.0 – 101.0	Normal Continuous
101.0 – 101.5	5 minutes
101.5 – 105.5	30 seconds
105.5 – 106.0	5 seconds
106.0	NEVER EXCEED

[35]SRL/EEC "ON"; consult AFM/POH with SRL "OFF" or inoperative.
[36]Some installations have an EGT (%) Indicator. See Glossary "EGT (%)", for details.

ENGINE WINDMILLING RPM LIMITATIONS

Windmilling (RPM in %)	Operating Limits	Action if Exceeded
28 – 100	1 minute max.	Feather propeller
18 – 28	DO NOT ALLOW THE ENGINE TO WINDMILL IN THIS RPM RANGE.	Feather propeller
10 – 18	5 minutes max.	Feather propeller or reduce airspeed to bring within tolerance/limit.
5 – 10	30 minutes max.	
0 – 5	Continuous	Avoid reverse rotation.[37]

[37]A side slip in the wrong direction can cause the prop to windmill in the opposite direction of normal rotation.

6 RECOMMENDED TPE331 OPS PROCEDURES

The procedures recommended in this section have been found beneficial in TPE331 engine operation to assure good performance, enhance engine reliability, and reduce cost of ownership.

These suggestions apply generally to all TPE331 model applications. Due to brevity of this booklet, they cannot specify all limits and operational considerations for specific aircraft applications.

IMPORTANT: THE FAA APPROVED AIRCRAFT FLIGHT MANUAL MUST ALWAYS REMAIN THE FINAL AUTHORITY FOR OPERATION OF THE AIRCRAFT.

The terms WARNING, CAUTION and NOTES used herein have the following definitions:

WARNING

OPERATING PROCEDURES, TECHNIQUES, ETC. WHICH COULD RESULT IN PERSONAL INJURY OR LOSS OF LIFE IF NOT CAREFULLY FOLLOWED.

CAUTION

OPERATING PROCEDURES, TECHNIQUES, ETC. WHICH COULD RESULT IN DAMAGE TO EQUIPMENT IF NOT CAREFULLY FOLLOWED.

NOTE

OPERATING PROCEDURES TECHNIQUES, ETC., WHICH WARRANT EMPHASIS.

6.1 NORMAL OPS PROCEDURES CHECKLIST

PREFLIGHT INSPECTION

- The importance of a thorough preflight inspection by a flight crew member cannot be overemphasized. Remember, in some cases it will be necessary to use a stepladder to adequately examine the engine inlet area.

CLEARED / DEFERRED WRITE-UPS – CHECKED

GPU[38](If use is intended) – CHECK OPERATION

- If external power is being used for engine start, proper operation and setting, such as adequate fuel (internal combustion powered GPU), appropriate voltage and amperage is of great importance.
  28 volt / 800-1600 amps

CAUTION

CONSULT THE AFM/POH FOR THE APPROPRIATE ELECTRIC RATING WHEN USING A GPU FOR ENGINE STARTING OR SYSTEMS CHECKS.

ENGINE INLET / EXHAUST COVER – REMOVED

ENGINE COWLING – INSPECT SECURITY

OIL LEVEL AND FILLER CAP – CHECK LEVEL & SECURITY

- If the engine has not been operated for several hours, the oil level should be checked prior starting; however, care should be taken to avoid overfilling. Occasionally, oil may be trapped within the engine gear case and therefore may provide an inaccurate level on the sight-gauge or dipstick. To assure a valid oil level check, as much oil as possible must be scavenged out of the gearbox and placed back into the oil tank. This is accomplished by using the engine starter to motor the engine to 15% RPM. If a low battery condition is present, the propeller should be pulled through by hand.

NOTE

ALWAYS ROTATE THE PROPELLER IN THE NORMAL DIRECTION OF ROTATION. TO DO OTHERWISE WILL CAUSE DAMAGE TO THE STARTER BRUSHES.

[38]Different Airframe Manufacturer use different expressions (GPU, APU, etc.)

The best time to check the correct oil level is within one hour after shutdown when oil is distributed throughout the engine as it is during operation and near operating temperatures.

WARNING

VISUALLY CONFIRM "CLEAR PROPELLER" BEFORE ENGAGING THE STARTER OR BEFORE MOTORING THE PROPELLER.

WARNING

EXERCISE EXTREME CARE WHEN OPENING OIL TANK DIPSTICK CAP IMMEDIATELY FOLLOWING ENGINE SHUTDOWN BECAUSE HOT OIL CAN SPILL AND CAUSE INJURY.

OIL & FUEL FILTER BYPASS VALVES – CHECK INDICATORS

- **Oil filter bypass:** An extended red pin or "poppet" indicates a restricted oil filter element. However, in very cold weather, due to increased OIL VISCOSITY, delta pressure across the filter element could exceed bypass filter values, causing momentary opening of the bypass valve. Redesigned bypass valves (if incorporated) provide a thermal lockout, preventing bypass indicator extension at oil temperature below about 38º C.

- **Fuel filter bypass:** Some installations have a pin or "poppet" that extends to indicate that the fuel filter bypass valve has opened. Other installations have pressure ports on the bypass valve, causing a cockpit light to illuminate whenever restricted fuel flow is encountered, indicating an impending filter bypass condition.

FUEL DRAINS – CHECK

As per AFM/POH

OIL COOLER AIR INLET – CHECK

- Should be clean, unobstructed, no evidence of leaks.

NOTE

CONTINUED OPERATION OF THE UNFEATHERING PUMP FOR EXTENDED PERIODS CAN CAUSE THE ENTIRE VOLUME OF OIL IN THE OIL TANK TO BE TRANSFERRED INTO THE GEARBOX. ONCE THIS OCCURS, IT WILL NO LONGER BE POSSIBLE TO MOVE THE PROP BLADES ONTO THE "ON-THE-LOCK" POSITION, UNLESS THE OIL IS TRANSFERRED BACK INTO THE OIL TANK. SEE OIL LEVEL AND FILLER CAP–CHECK LEVEL PROCEDURE

PROPELLER BLADES – CHECK (ON THE START LOCKS)

- On the ground only: prior to engine starting, verify that the prop is 'on-the-locks' (flat pitch, 1-2 degrees). If the blades are in feather (85-90 degrees), move and hold the power lever in the full reverse position and then use the unfeathering pump. (See OIL LEVEL AND FILLER CAP check procedures above).

PROPELLER BLADES – CONDITION

- Check the leading edges of the propeller for erosion, nicks, cracks and/or bend blades. Any of these discrepancies can become worse over time and may cause propeller imbalance. Lack of propeller balance may impact engine wear.

PROPELLER HUB/SPINNER – CHECK

- Check for security and oil/grease leaks. Improper servicing can cause grease to leak, creating propeller imbalance.

CAUTION

DAMAGED OR BLOCKED SENSORS CAN SEND ERRONEOUS SIGNALS TO THE FCU / SRL / VRL / EEC AND CAN CAUSE ERRATIC ENGINE OPERATIONS

ENGINE INLET AND ENGINE INLET SENSORS – CHECK

- The inlet must be clear and unobstructed.
- Check inlet surface for discoloration[39] and for evidence of residual oil.[40]
- The P2-T2 sensor[41] (T2 only with Bendix FCU) should be checked for security and to assure that they are undamaged and clean.

Tt2[42] SENSOR (SRL/VRL) – CHECK

- If located in the inlet, the Tt2 sensor can be found opposite of the P2T2 sensor, in the oil cooler inlet or anywhere on the engine cowling, depending on the aircraft type.
- The Tt2 sensor provides temperature-sensing information to the SRL controller, the EEC, or IEC Unit, depending on engine type.
- The sensor should be checked for general conditions and security.

ENGINE INLET - AWI[44] NOZZLES – CHECK

- Inspect the Water-Methanol injection spray nozzles for condition and security.

ENGINE INLET / 1st STAGE COMPRESSOR – CHECK

- Inspect the entire 360 degrees of the visible area of the first stage compressor/impeller, by turning the propeller slowly in the NORMAL direction of rotation.[45] Any evidence of damage, nicks, cracks, bent or missing blades should be brought to the attention of a qualified technician prior to starting the engine.

PROPELLER – ROTATE BY HAND

- A valuable practice toward developing a “feel” for characteristic engine sound and rotational resistance; helps to establish a baseline of both feel and noise so that, should a change be detected on future prop rotations, appropriate maintenance investigation should be initiated.

[39] Discoloration, possibly due to excessive use of inlet heat during ground operation.
[40] Minor compressor seal leaks are typically a “nuisance” and do not normally affect the airworthiness of the engine. However, the leak should be written up and brought to the prompt attention of your maintenance department or service facility.
[41] Pt2Tt2 (Pressure total at station 2 and Temperature total at station 2)
[42] Tt2: T = Temperature, t = total, 2 = Station 2 (See Air Flow Station, Page 12)
[43] Most TPE331-10 through –12 engines use an SRL system. The TPE331-8/-10N/ and -12B engines use an EEC system with SRL function. TPE331-14/-15 engines use an IEC system with a VRL.
[44] AWI = Alcohol Water Injection
[45] normal DIRECTION of rotation in order to avoid damage to carbon brushes in the starter/generator.

- Abnormal resistance can be caused for several reasons:
  1) Imminent bearing failure could produce constant drag and/or unusual noise.
  2) Partial stator separation can cause drag and/or noise.
  3) Shaft bow can cause an intermittent drag or noise as the "high spot" make contact.

WARNING

ABNORMAL NOISE OR RESISTANCE TO ROTATION COULD BE AN INDICATION OF AN IMPENDING ENGINE FAILURE. IF ABNORMAL NOISE OR RESISTANCE IS OBSERVED, FULLY INVESTIGATE THE CAUSE. FAILURE TO DO SO COULD RESULT IN A FAILURE OF THE ENGINE WITH SUBSEQUENT LOSS OF OR DAMAGE TO THE AIRCRAFT AND SERIOUS OR FATAL INJUIRIES.

- If an intermittent drag is noted[46], hand rotation should be stopped at the point where the resistance is most obvious; representing 180 degrees displacement of the main rotating group (neutralizing the thermally caused imbalance as cooling continues).
- Rotational freedom should be re-checked after about three minutes[47] of additional cooling. (See Shaft Bow in Section 6.3 ABNORMAL OPS PROCEDURES.)

NOTE

ROTATIONAL RESISTANCE DUE TO SHAFT BOW IS UNUSUAL EXCEPT FOR THE INITIAL FEW HOURS OF OPERATION FOLLOWING REPLACEMENT OF THE INTER-STAGE AIR SEALS.

CAUTION

DO NOT START THE ENGINE IF THE PROPELLER IS NOT FREE TO ROTATE.

OAT SENSOR – CHECK

- Inspect for security and a clean, unpainted probe.

[46]For example "Shaft bow"
[47]Depending on ambient variables

NOTE

ENGINE PERFORMANCE AND OPERATING CHARACTERISTICS ARE A FUNCTION OF OAT AND PA. THE OAT SENSOR MAY PICK UP REFLECTED GROUND HEAT AND THUS MAY READ A HIGHER AMBIENT TEMPERATURE THAN THE OAT REPORTED FROM AN OFFICIAL METEROLOGICAL OBSERVATION SOURCE. THE ERROR WILL VARY WITH SUN POSITION AND TYPE OF GROUND SURFACE.

AWI TANK GAUGE / FILLER CAP – CHECK

- Verify content and filler cap security. Sight-gauge may not show fluid level when tank is full.

EXHAUST NOZZLE / TURBINE BLADES – CHECK CONDITION

- If visible, check (a) exhaust pipe for roundness, (b) condition of rear (3rd stage) turbine blades and (eight) EGT thermocouples[48], (c) evidence of residual oil in the tail pipe.[49]

AIRCRAFT ORIENTATION – INTO THE WIND

NOTE

EXCEPT AS NOTED IN SOME AFM, POH, THERE ARE NO WIND RESTRICTIONS FOR ENGINE STARTS BECAUSE MAXIMUM TAIL WIND IS A FUNCTION OF OTHER START CONDITION, e.g. START BUS VOLTAGE, RESIDUAL TURBINE TEMPERATURE AND AMBIENT CONDITIONS.

- Strong tail winds during a ground start can create excessive propeller loads against normal direction of rotation. Additionally, it causes a backpressure in the tailpipe and may cause ingestion of exhaust gases.

- A headwind provides windmill power, ram inlet air, and a clear exhaust path.

[48]Only with EGT system (ITT system temperature probes are not visible).
[49]Turbine seal (oil) leaks must be noted for maintenance follow-up prior to next flight.

BATT / GPU SWITCH / VOLTAGE – CHECK

- It is very important that an adequate and properly charged battery system of 24-26 volts be used for all internal power starts.
- External power (GPU) should provide 28 volts[50] and a 1000 to 1600 amps overload protection, depending upon the airframe (See applicable AFM/POH), should be used whenever possible and particularly when the temperature is below 12º C (54º F). When using external power, the aircraft battery should be either "ON" or "OFF" as specified in the AFM/POH.
- See also page 65, Extreme Cold Weather Operations.

BATTERY START MODE SWITCH – SET

- "SERIES" or "PARALLEL" consult the appropriate AFM/POH

SRL ˘ P/P POWER SWITCH[51] – NORMAL

BLEED AIR SWITCHES – OFF

ENGINE STOP / FEATHER CONTROL – NORMAL

> **NOTE**
>
> **ENGINE MODELS WITH "EEC" — CYCLE MANUAL SHUT OFF VALVE TO "OFF", THEN "ON".**

ENGINE SPEED LEVER (SL)[52] – CHECK AND SET

- The SL should have a small cushion when full forward in the max engine speed position and when full aft in the low engine speed position this insures that the linkage is contacting the governor stops before the SL reaches full travel.
- Observe that no undue force to move the SL is required.
- The SL should be set in the LOW or TAXI Engine Speed position.

POWER LEVER (PL) – CHECK AND SET

[50]GPU voltage should be slightly higher than internal battery voltage to ensure that starting power comes from the GPU.
[51]If applicable.
[52]ENGINE SPEED LEVER(SL) = also called RPM Lever or CONDITION LEVER (CL) see also glossary

CAUTION

THE START LOCK BLADE ANGLE IS ALMOST THE SAME AS THE GI BLADE ANGLE. THEREFORE, DO NOT USE GI STOP AS POWER LEVER START POSITION, BECAUSE THE LOCKS COULD INADVERTENTLY RELEASE DURING ENGINE START.

- PL should be checked throughout their full travel to assure that they are free and set at or just aft of FLIGHT IDLE (FI) to assure that the prop blades will not come off the locks during the starting cycle. In order to reduce the possibility of inadvertent start-lock release during starting due to hysteresis in the PL cables and push/pull assembly, use the following sequence when checking PL travel:

1. **Check GI (GROUND IDLE) Stop**: This position should be easily identifiable (feel & visually) so that the PL can easily and quickly be placed at GI in order to unload the engine during ground operation.
2. **Check REVERSE CUSHION**: PL should be moved backward and mechanically stopped in REVERSE by the PPC[53] prior to full aft travel of the Power Lever.
3. **Check MAX CUSHION:** PL should be moved fully forward and mechanically stopped at MAX by the maximum fuel flow stop on the FCU[54] prior to reaching full forward travel of Power Lever.
4. **Check FI (FLIGHT IDLE) Stop**: PL should be moved backward and mechanically stopped at FI. This position should be a positive detent, but should not restrict aft travel after the PL is lifted over the stops.
5. **Place PL to START position:**[55]

BATT START/BATT SWITCH – SET / ON

- or as required per AFM/POH

"SRL OFF" LIGHT[56] – ILLUMINATED

BOOST PUMP – ON / CHECK FUEL PRESSURE

- Normally pressurization of the fuel delivery system is desirable. Therefore, fuel boost pumps should be used.[57]
- Indicated fuel pressure is measured between the LP[58] and the HP[59] fuel pumps and is called interstage pressure.

[53]PPC = Prop Pitch Control unit.
[54]FCU = Fuel Control Unit
[55]Actual best PL start position may vary from one aircraft type to another (see AFM/POH)
[56]if applicable
[57]or as recommended by the AFM/POH.
[58]LP = Low Pressure
[59]HP = High Pressure

- When the boost pump is ON and the engine is not operating, indicated fuel pressure is that pressure generated by the boost pump alone.
- When the boost pump is OFF and the engine is operating, indicated fuel pressure is the pressure generated by the LP pump alone.
- When the boost pump is ON and the engine is operating, indicated fuel pressure is a combination of the boost pump and the LP pump.
- HP fuel pressure is not indicated in the cockpit.

START MODE SWITCH – NORMAL / MANUAL

- As applicable. (Refer to appropriate AFM, POH)

RESIDUAL TURBINE TEMPERATURE – CHECK

- Start characteristics vary with residual oil temperature and residual turbine temperature.
- Recommended max residual turbine temperature for re-starting after a "Quick Turn-Around" is

300º C ITT (200º C EGT)

- If indicated ITT is in excess of 300º C (200º C EGT), the engine may be cranked without fuel and ignition until 15 percent RPM is attained, at which time the engine can start.
- See also ENGINE START WITH HIGH RESIDUAL ITT/EGT

NOTE

ON THE FIRST START OF THE DAY, INDICATED OIL TEMPERATURE AND TURBINE TEMPERATURE SHOULD BE SIMILAR TO THE OAT.

NTS SYSTEM CHECK (see Section 6.2 SYSTEMS CHECK PROCEDURES)

ENGINE START SWITCH – ACTIVATE

CAUTION:

IT IS IMPORTANT TO REMEMBER THAT IF THE BATTERY IS OFF AND A MALFUNCTION OF THE GPU IS ENCOUNTERED, THE ELECTRICAL STOP BUTTON MAY NOT SHUT THE ENGINE DOWN BECAUSE NO ELECTRICAL POWER SOURCE IS AVAILABLE (DEPENDING UPON THE TYPE OF THE AIRCRAFT).

THEREFORE, THE "MANUAL FUEL SHUT-OFF" (CONDITION LEVER OR SEPARATE SWITCH, KNOB, HANDLE, ETC.) SHOULD BE GUARDED DURING ALL STARTS AND USED TO CUT-OFF FUEL FLOW TO THE ENGINE IF A STARTING PROBLEM OCCURS.

SOME INSTALLATIONS REQUIRE THAT THE START SEQUENCE BE ELECTRICALLY TERMINATED PRIOR TO ENGINE VENTILATION OR ANOTHER START ATTEMPT. (Refer to the AFM/POH)

NOTE

INITIAL ENGINE START SEQUENCE PLACES THE LARGEST LOAD ON THE ELECTRICAL POWER SOURCE. THEREFORE, THE PILOT SHOULD NOTE ELECTRICAL SYSTEM RESPONSE TO THE ENGINE START LOAD (FOR EXAMPLE, OBSERVE VOLTAGE DROOP).

- If excessive voltage droop is noted, accompanied by a slow rate of acceleration[60], an early decision to abort the start attempt should be made.

BATTERY / GPU VOLTAGE – CHECK[61]

- Readings with and without starting loads are needed to check satisfactory operation.
- Electrical power source must continue to supply sufficient voltage for ignition, power the starter under load and accelerate the engine fast enough to avoid an over-temperature condition.
- Initial voltage droop should quickly recover to about 20 – 22 volts minimum.

[60]See Glossary "ACCELERATION, rate of"
[61]If applicable

- Normal engine rotation indications.
- 10% RPM - Evidence of fuel flow and ignition.
- Observe turbine temperature rise within 10 sec after 10% RPM, or not later than 18% RPM. If not, abort the start and investigate.
- Monitor normal oil-pressure rising (oil pressure indicator and an independent LOP[62] annunciator light) during the start and stabilized at idle.

START FUEL ENRICHMENT

NOTE

ENRICHMENT PROVIDES SUPPLEMENTAL FUEL TO PROMOTE A GOOD 'INITIATION OF COMBUSTION' AND SATISFACTORY ENGINE ACCELERATION DURING THE ENGINE START CYCLE.

- Engines with SPR[63]:

Non-automatic enrichment can be accomplished manually by using the following procedure:

NOTE

CONSULT THE FLIGHT MANUAL FOR YOUR AIRCRAFT, AS THERE ARE A VARIETY OF "SPR" AND "SFE" SYSTEMS, CORRESPONDING PROCEDURES, LIMITATIONS AND RESTRICTIONS.

ENRICH BUTTON (SPR)...	SHOULD BE...
1. Prior to 10% RPM	– ON
2. At light-off (ITT/EGT rise)	– OFF (verify valve function)

A drop in fuel flow and reduced rate of EGT rise verifies that the enrichment valve is OFF.
If proper function cannot be confirmed and valve remains open: – ABORT START

[62]LOP (Low Oil Pressure)
[63]Start Pressure Regulator

If proper valve function is confirmed:

3. Enrich Button – ON-OFF-ON-OFF …

DO NOT ENRICH ABOVE 700° C EGT or 900° C ITT (as applicable)

- Engines with SFE[64]:

Automatic enrichment: The auto-start feature provides metered fuel to aid engine start and acceleration; the set point for the automatic SFE is 695º C ± 5º.
Manual enrichment: When performing a manual start, the automatic function should be duplicated as closely as possible by manually activating enrichment, as follows:

ENRICHMENT BUTTON (SFE) . . .	**SHOULD BE . . .**
1. Prior to 10% RPM: SFE BUTTON	– ON
2. At light off[65] : SFE BUTTON	– OFF (to verify valve function)

A drop in fuel flow and reduced rate of turbine temperature rise verifies that the enrichment valve is OFF.

If proper function cannot be confirmed and valve remains open: – ABORT START

If proper valve function is confirmed:

3. Modulate enrichment – ON-OFF-ON-OFF[66]
(Modulate to 650-700° C EGT or 850-900° C ITT)

CAUTION:

OBSERVE START TEMPERATURE LIMITS AS PUBLISHED IN THE APPROPRIATE AFM/POH. DO NOT ENRICH ABOVE 700° C EGT (900° C ITT).

See also Chapter 5.3 LIMITATIONS

[64]Start Fuel Enrichment
[65]"Light off" means ignition and is indicated by a rise in turbine temperature.
[66]emulating computer action

CAUTION

DO NOT USE FUEL ENRICHMENT IF EGT (ITT) APPROACHES THE START TEMPERATURE LIMIT.
IF INDICATED TURBINE TEMPERATURE APPROACHES THE STARTING LIMIT "ABORT THE START" – (Refer to AFM/POH)

See Chapter 5.3 LIMITATIONS.

CAUTION

DO NOT ALLOW THE ENGINE RPM TO "DWELL" BETWEEN 18 AND 28 PERCENT RPM. IF NORMAL ENGINE ACCELERATION[67] WITHIN CRITICAL SPEED RANGE DOES NOT OCCUR[68] OR IF THE RPM STOPS INCREASING PRIOR TO REACHING NORMAL IDLE, "ABORT THE START". (Refer to AFM/POH)

OIL PRESSURE **– CHECK**

- Verify positive oil pressure indication and LOP[69] annunciator light "OUT" upon reaching ground idle RPM.

GENERATOR(s) **– ON / MONITOR**

- Observe load limit, per AFM/POH, prior to subsequent BATT/Generator assist start.

PRE-TAXI / TAXI CHECKS

OIL TEMPERATURE/PRESSURE **– CHECK NORMAL**

- When operating in extreme climates (Hot or Cold), see Section 6.3 ABNORMAL OPS PROCEDURES

BOOST PUMPS **– ON** (or as per AFM/POH)

GENERATOR VOLTS / AMPS **– CHECK**

- For generator assist start, see AFM/POH

[67]See Glossary: Acceleration Rate
[68]Dwelling in the critical speed range can cause damage to the rotating assembly and mating parts (Rotating Group Rub Damage).
[69]Oil pressure indication and LOP (Low Oil Pressure) light have independent, thus redundant pressure sensing sources.

BATTERY TEMPERATURE INDICATOR[70] – CHECK

OVERSPEED GOVERNOR CHECK
(see Chapter 6.2 SYSTEMS CHECK PROCEDURES)

SRL COMPUTER / TTL / Δ P/P – CHECK

- Periodically checked per MM/AFM/POH, if applicable.

PROPELLER START LOCKS – RELEASE

- RPM lever position as recommended in AFM/POH
- Slowly move power lever toward "REVERSE", one at a time.

NOTE

IF BETA LIGHT GOES OUT, HESITATE MOMENTARILY UNTIL IT REILLUMINATES, THEN CONTINUE MOVING PL TOWARD REVERSE.

- Torque increasing in REVERSE indicates the blades have moved aft the start locks, but it is not a direct indication of start lock release.
- Torque decreasing from REVERSE to GROUND IDLE indicates the blades are moving back toward the start locks.
- Torque increasing from GROUND IDLE to FLIGHT IDLE indicates the blades are moving past the start lock position to the FLIGHT IDLE blade angle, indicating start lock release.
- Torque increasing with the power lever movement forward of Flight Idle positively indicates that start lock removal has occurred.

NOTE

ON MULTI-ENGINE AIRPLANES, START LOCK DISENGAGEMENT MAY BE VERIFIED DURING TAXIING BY INDIVIDUALLY ADVANCING POWER LEVERS TO FLIGHT IDLE (OR SLIGHTLY FORWARD OF FLIGHT IDLE) - THE AIRCRAFT'S TENDENCY TO TURN OPPOSITE THE ADVANCED ENGINE SUBSTANTIATES START LOCK DISENGAGEMENT.

[70]If applicable

ENGINE RIGGING / GROUND CHECK
(see Chapter 6.2 SYSTEMS CHECK PROCEDURES)

TAKEOFF POWER / PERFORMANCE – COMPUTE

- Calculated with reference to the AFM/POH (Performance Section);
- Remember, Takeoff Performance Data is based on accurate OAT and Pressure Altitude (PA)
- To determine PA, set altimeter to 29.92 inches Hg or 1013.25 mb / hPa.

WATER ADDER/APR/CPR – CHECK

- As applicable per AFM/POH

INLET ANTI-ICE SYSTEM – CHECK

- Check the operation of the inlet anti-ice system according to the AFM/POH

CAUTION

DO NOT EXCEED GROUND CHECK TIME LIMITATIONS AS SPECIFIED IN THE AFM/POH.

CAUTION

WHEN ICING CONDITIONS DO NOT EXIST, THE INLET ANTI-ICING SHOULD NOT BE USED MORE THAN 10 SECONDS IF AMBIENT TEMPERATURE IS ABOVE 10ºC (50ºF), OR AS STATED IN THE APPLICABLE AFM/POH.

INLET ANTI-ICE SYSTEM – ON" IF REQUIRED

- As per AFM/POH

BLEED AIR – AS DESIRED [71]

- Consult appropriate AFM/POH.

[71]Remember, engine bleed air affects engine performance.

TAKEOFF

FUEL BOOST PUMPS – **ACCORDING TO THE AFM/POH**

SPEED LEVER – **HIGH RPM**[72]

- Engine RPM levers set “HIGH” RPM (verify 96-97% RPM).

“SRL OFF” LIGHT[73] – **OUT**

- Typically, “SRL OFF” light extinguishes above 80 percent RPM

IGNITION MODE – **AS REQUIRED**

- As per AFM/POH
- Refer also to OI331-11[74] most current revision for proper use of engine ignition and engine inlet anti-ice when operating in icing conditions.

POWER LEVER – **SET**

- Advance power levers toward “TAKEOFF”.
  NOT TO EXCEED MAX TURBINE TEMPERATURE AND/OR MAX TORQUE, PSI or HP

- Set minimum TARGET or REFERENCE TORQUE FOR TAKEOFF.

NOTE

MOST AFM/POH TAKEOFF PERFORMANCE CHARTS ARE BASED ON SETTING TAKEOFF TARGET TORQUE PRIOR TO RELEASING THE BRAKES.

[72]label may vary by aircraft type
[73]if applicable
[74]OI = Operating Information Letter (See Glossary)

BETA LIGHTS – **CHECK "OUT"**

ENGINE RPM – **CHECK**

- TPE331-1 through -12: RPM = 100.0 +/- 0.5%;
- TPE331-14 and -15: RPM = 100.5 +/- 0.5%.

WATER ADDER/APR/CPR SWITCH – **AS REQUIRED**

- As per AFM/POH

> **NOTE**
>
> **APR IS ALSO REFERRED TO AS "PERFORMANCE RESERVE"**

TORQUE/TEMPERATURE LIMITS – **MONITOR**

- Assure that computed takeoff torque, can be obtained at or below turbine temperature limit
- See Chapter 5.3 LIMITATIONS

> **NOTE**
>
> **DURING THE TAKEOFF ROLL, IT SHOULD BE RECOGNIZED THAT THE ENGINE IS STILL THERMODYNAMICALLY STABILIZING. AS AIRSPEED INCREASES, MINOR POWER LEVER ADJUSTMENTS MAY BE REQUIRED TO AVOID EXCEEDING TEMPERATURE AND/OR TORQUE LIMITS.**

> **NOTE**
>
> **ON AIRCRAFT EQUIPPED WITH TORQUE AND TEMPERATURE LIMITING SYSTEMS, ADVANCE THE POWER LEVERS ONLY TO THE POINT WHERE LIMITING BECOMES EFFECTIVE.**

CLIMB / CRUISE

WATER ADDER/APR/CPR – **"OFF"** (If applicable)

CLIMB/CRUISE POWER – **SET**

- Adjust power to "MAXIMUM CLIMB" or slightly less, as desired (96-97% = Normal Climb and Cruise RPM; see AFM/POH.)

- Prior to selecting "Bleed Air - ON":
  1. Reduce turbine temperature by 15 degrees C.
  2. Select the desired bleed position.
  3. Re-set climb/cruise turbine temperature to the limit or slightly less, as appropriate.
- Prior to RPM reduction:
  1. Reduce turbine temperature by 50 degrees C.
  2. Set desired RPM (96-97% = Normal).
  3. Re-set climb/cruise turbine temperature limit or slightly less, as appropriate.

WARNING

IN-FLIGHT BETA-MODE (PL BEHIND FI)[75] IS PROHIBITED[76]

NOTE

ON AIRCRAFT EQUIPPED WITH TORQUE AND TEMPERATURE LIMITING SYSTEMS, SET THE POWER AT OR BELOW THE POINT WHERE LIMITING BECOMES EFFECTIVE. TO AVOID SATURATING THE LIMITER.

[75]PL = Power Lever, FI = Flight Idle
[76]unless the airplane is specifically certified for In-Flight Beta-Mode.

DESCENT POWER – SET

- Use power and RPM appropriate to desired rate of descent

NOTE

TORQUE AND TURBINE TEMPERATURE MAY INCREASE SLIGHTLY WITH INCREASING AIRSPEED.

APPROACH POWER – SET

- Select high RPM prior to short final; per AFM/POH.

WARNING

RAPID ADVANCEMENT OF THE RPM LEVERS AT REDUCED AIRSPEED WILL RESULT IN HIGH MOMENTARY DRAG (ASSYMETRIC DRAG IN MULTI-ENGINE AIRCRAFT).

POWER LEVERS (After touch down) – GROUND IDLE

- Following touchdown, move the power levers to “GROUND IDLE”
- Observe that BETA lights have illuminated prior to selecting reverse for braking.

REVERSE (Beta lights “ON”) – AS REQUIRED

WARNING

ON AIRCRAFT EQUIPPED WITH THE HONEYWELL ELECTRONIC ENGINE CONTROL SYSTEM (EEC) IN “MANUAL MODE”, 100% RPM IN FLIGHT IS AVAILABLE; HOWEVER, ONLY APPROXIMATELY 85% RPM ON THE GROUND IS AVAILABLE. NO REVERSE BRAKING IS PERMITTED. IF MANUAL MODE HAS BEEN SELECTED IN FLIGHT FOR ONE ENGINE, INSURE BOTH ENGINES ARE IN “MATCHED” MODES AND HIGH RPM PRIOR TO FINAL APPROACH.

CAUTION

OBSERVE THE FLIGHT MANUAL AIRSPEED LIMITS FOR USE OF REVERSE - DO NOT ALLOW RPM TO "DROOP" BELOW 93.5%.

SPEED LEVER – LOW

- Select "LOW" RPM (speed lever low) after aircraft has slowed to normal taxi speed.

ENGINE SHUTDOWN

NOTE

IT IS RECOMMENDED TO OPERATE THE ENGINE A MINIMUM OF THREE MINUTES WITH SPEED LEVER "LOW" AT MINIMUM POWER PRIOR TO SHUTDOWN[77].

COOLDOWN PERIOD – OBSERVE

- Observe engine cool down requirements prescribed in the AFM/POH

ENGINE(S) – SHUTDOWN

- Activate the stop button(s)/switches.

FUEL PURGE DISCHARGE[78] – OBSERVE

- Holding the "Stop" button for a minimum of five seconds will assure complete discharge of the fuel purge accumulator.
- Verify purge system functioning properly, which is indicated by a slight increase in EGT / ITT and RPM.[79]

[77]See also POST FLIGHT "Propeller - Hand rotate"
[78]EPA kit activation
[79]EPA law requires proper function. Proper function also reduces fuel nozzle coking.

START LOCKS **– ENGAGE**

- Select “REVERSE” by not less than 50 percent RPM to ensure that the propeller blades are firmly placed on the start locks (Start lock blade angle).

SPOOL DOWN TIME **– MONITOR**

- Monitor engine spool down time, verifying it is consistent with previous shutdowns.

POWER LEVERS **– RESET**

- |Reset the power levers forward of ground idle (flight idle if possible) following engine shutdown.

POST FLIGHT INSPECTION

PROPELLER(s) **– HAND ROTATE**

- Hand rotation of the engine (3 – 4 propeller revolution in normal direction) limits peak post shutdown engine temperature and will enhance fuel nozzle life.

WARNING

EXERCISE EXTREME CARE WHEN OPENING OIL TANK DIPSTICK CAP IMMEDIATELY FOLLOWING ENGINE SHUTDOWN BECAUSE HOT OIL CAN SPILL AND CAUSE INJURY.

OIL QUANTITY **– CHECK**

- Oil quantity, if desired, is most accurately checked within one hour after engine shut down.

OIL/FUEL FILTER BYPASS VALVE **– CHECK INDICATORS**

- It is recommended to check for possible bypass indication immediately following engine shutdown in order to allow for maximum trouble shooting time, if necessary.
- See Preflight Inspection for details

ENGINE INTAKE/EXHAUST COVER – INSTALL

- Install inlet and exhaust covers. (Allow about 20 minutes for cooling, before installing covers, depending on residual turbine temperature, wind conditions and OAT)

DISCREPANCIES – WRITE UP

- Write-ups for maintenance corrective action should be clear, concise, and include ALL pertinent information.
- Follow-up with maintenance; often symptoms described cannot be duplicated on the ground.

6.2 SYSTEMS GROUND CHECK PROCEDURES

FEATHER VALVE AND FUEL SHUTOFF VALVE CHECKS

- These are functional checks that…
  - help to detect possible mis-rigging or other problems with the feather valve or the fuel shutoff valve,
  - verify that the feather valve can be manually opened and closed from the cockpit and
  - verify, during a subsequent successful engine ground start, that the Fuel Shutoff Valve is moved back to the AUTO position when the cockpit feather control is reset.

WARNING

IT IS STRONGLY RECOMMENDED THAT THE FEATHER VALVE AND FUEL SHUTOFF VALVE GROUND CHECK BE ACCOMPLISHED PRIOR TO MAINTENANCE TEST FLIGHTS OR TRAINING FLIGHTS DURING WHICH INTENTIONAL ENGINE SHUTDOWNS ARE PLANNED.

WARNING

A MIS-RIGGED FEATHER VALVE MAY RESULT IN DIFFICULTIES IN AIRCRAFT CONTROLLABILITY DUE TO PROPELLER WINDMILLING DRAG IN THE EVENT OF AN INFLIGHT SHUTDOWN. MALFUNCTIONS OR MIS-RIGGING OF THE FUEL SHUTOFF VALVE MAY RESULT IN AN INABILITY TO AIRSTART AN ENGINE.

MANUAL TEST OF FEATHER VALVE PRIOR TO ENGINE START

(For Aircraft with NTS Check Light[80])

ENGINE – OFF

- This test must be done prior to engine start. Consult the appropriate AFM/POH.

POWER LEVER – FLIGHT IDLE

NTS LIGHT – PRESS TO TEST

- Depending upon the airframe make & model, the NTS LIGHT is also called the NTS indicator light, BETA RANGE Annunciator or the NTS check light.

UNFEATHER PUMP – ACTIVATE

- The unfeather pump must be energized to raise the propeller oil pressure level sufficiently to activate a pressure sensitive switch, which will turn on the NTS LIGHT.
- Depending upon the aircraft type, different labels or switches to activate the UNFEATHER PUMP may be used. Consult the appropriate AFM/POH.

NTS LIGHT – CHECK ON

FEATHER VALVE – FEATHER

- Pull or switch the feather valve to feather while observing the NTS LIGHT to go out.

NTS LIGHT – CHECK OUT

FEATHER VALVE – RESET

- Reset the feather valve while observing the NTS LIGHT to come on.

NTS LIGHT – CHECK ON

UNFEATHER PUMP – OFF

NOTE

KEEP FEATHER PUMP RUNTIME TO A MINIMUM IN ORDER TO AVOID EXCESSIVE OIL ACCUMULATION IN THE GEAR BOX.

[80] Sometimes combined with the BETA light.

MANUAL TEST OF FEATHER VALVE PRIOR TO ENGINE START

(For Aircraft without NTS Check Light)

WARNING

IF THE NTS LIGHT OR THE PROPELLER MOVEMENT DOES NOT CORRESPOND AS SPECIFIED IN THIS PROCEDURE (AS APPLICABLE), THE FLIGHT MUST BE POSTPONED UNTIL CORRECTIVE MAINTENANCE ACTION IS COMPLETED.

ENGINE – OFF

- This test must be done prior to engine start. Consult the appropriate AFM/POH.

POWER LEVER – FULL REVERSE

UNFEATHER PUMP – ACTIVATE

- Depending upon the aircraft type, different labels or switches to activate the UNFEATHER PUMP may be used. Consult the appropriate AFM/POH.

PROPELLER BLADES – OBSERVE

- Visually observe propeller blades movement toward reverse.

FEATHER VALVE – FEATHER

- Pull or switch the feather valve while observing propeller blades movement.

PROPELLER BLADES – OBSERVE

- Visually observe the propeller blades movement toward feather.

FEATHER VALVE – RESET

- Visually observe propeller blades movement toward reverse.

UNFEATHER PUMP – OFF

NTS SYSTEM CHECK

(Hydro-mechanical Torque Sensing System)

- The NTS system check can be performed for troubleshooting and failure detection and is made by observing the NTS LIGHT during the engine cranking cycle.

WARNING

IF THE NTS LIGHT OR THE PROPELLER MOVEMENT DOES NOT CORRESPOND AS SPECIFIED IN THIS PROCEDURE (AS APPLICABLE), THE FLIGHT MUST BE POSTPONED UNTIL CORRECTIVE MAINTENANCE

WARNING

THE NORMAL NTS SYSTEM GROUND CHECK DOES NOT VERIFY WHETHER THE OIL SUPPLY FROM THE PROPELLER GOVERNOR (PG) IS AVAILABLE TO THE NTS SYSTEM. IF THE OIL PASSAGE BETWEEN THE PG AND THE DOWNSTREAM NTS SYSTEM IS BLOCKED OR CLOGGED, THE NORMAL CHECK PROCEDURE MAY NOT REVEAL THE INOPERATIVE SYSTEM AND THE AFFECTED ENGINE MAY NOT "NTS" IN THE EVENT OF AN INFLIGHT SHUTDOWN, NECESSITATING IMMEDIATE MANUAL FEATHERING OF THE PROPELLER TO REDUCE WINDMILLING DRAG. (See also OI331-14 and read the Supplementary NTS Check Procedure below).

NOTE

THE FOLLOWING - NTS TEST - PERTAINS TO TPE331 ENGINES EQUIPPED WITH A "HYDROMECHANICAL TORQUE INDICATION SYSTEM" AND WITH AN NTS LIGHT. THIS TEST SHOULD BE ACCOMPLISHED DURING THE FIRST START OF THE DAY, OR IN ACCORDANCE WITH THE APPROPRIATE MM[81] AND/OR AFM/POH. REFER ALSO TO THE AFM/POH FOR PROCEDURES AND APPLICABILITY.

[81]MM = Maintenance Manual.

POWER LEVER – SET FLIGHT IDLE

- PL on engines with 1591 RPM propeller shaft speed must be set to FI in order to close the NTS system lockout rotary valve in the PPC[82]
- See also NTS Checkout Solenoid in the Glossary

NTS LIGHT – PRESS TO TEST

- Depending upon the airframe make & model, the NTS LIGHT is also called the NTS indicator light, BETA RANGE Annunciator or the NTS check light.

UNFEATHER PUMP – ACTIVATE

- The unfeather pump must be energized to raise the propeller oil pressure level sufficiently to activate a pressure sensitive switch, which will turn on the NTS LIGHT.
- Depending on the aircraft type, different labels or switches to activate the UNFEATHER PUMP may be used. Consult the appropriate AFM/POH.
- Unfeather pump remains on until check is complete.

NTS LIGHT – CHECK ON

ENGINE START SWITCH – ACTIVATE

- Negative torque input from the starter motor causes the torque sensor metering-valve to restrict oil flow into the gearcase.
- Unfeathering pump oil pressure builds up at the feather valve.
- The feather valve opens, causing a drop in oil pressure and the NTS LIGHT to go out.

NTS LIGHT – CHECK OUT

START SEQUENCE – MONITOR

- Normal engine rotation indications.
- 10% RPM - Evidence of fuel flow and ignition.
- Observe turbine temperature rise within 10 sec after 10% RPM, or not later than 18% RPM. If not, abort the start and investigate.
- Monitor normal oil-pressure rising (oil pressure indicator and an independent LOP[83] annunciator light) during the start and stabilized at idle.

[82]PPC = Propeller Pitch Control unit.
[83]LOP (Low Oil Pressure)

15 - 30 % RPM[84]

- The *NTS LIGHT* remains out until the driving force from the power section catches up with the driving force from the starter.
- As both driving forces become equal, the negative torque sensor begins to open the metering valve.
- The feather valve reseats (closes), allowing pressure from the unfeathering pump to build up.
- The NTS LIGHT re-illuminates at about 15 – 30 % RPM.

NTS LIGHT – CHECK ON

- The NTS test is complete when the NTS LIGHT re-illuminates at about 15 – 30 % RPM.

UNFEATHER PUMP – DE-ACTIVATE

SUPPLEMENTARY NTS CHECK

WARNING

IF DURING THE SUPPLEMENTARY NTS CHECK IT IS DISCOVERED THAT PROPELLER RPM INCREASES ABOVE NORMAL PG LOW SETTING, THE FLIGHT MUST BE POSTPONED UNTIL CORRECTIVE MAINTENANCE ACTIONS HAVE BEEN COMPLETED.

DO NOT ATTEMPT TO CORRECT THE DISCREPANCY SOLELY BY ADJUSTING THE ENGINE SPEED CONTROL LEVER OR PG RIGGING BECAUSE THIS WILL HIDE THE PROBLEM AND WILL NOT REMEDY THE PROBLEM.

NOTE

THERE IS NO COMPARABLE SUPPLEMENTARY NTS GROUND CHECK FOR "FAST TURN" ENGINES (100% = 2000RPM); HOWEVER, THE DESIGN OF THESE ENGINES IS INHERENTLY LESS SUSCEPTIBLE TO BLOCKAGE OF THE OIL PASSAGE BETWEEN THE PG AND THE NTS SYSTEM.

[84] 15-30% RPM are approximate values, not a limitation.

- Applies to TPE331 engines with "slow turn" propellers[85] and should be applied to engines, which are equipped with a strain gage torque sensing system.
- Procedure is recommended for applicable engines following any maintenance during which the PG has been removed, prior to any flight during which an intentional engine shutdown will be performed or as required in the AFM/POH.
- Reveals a loss of PG oil supply to the NTS system by resetting the PG speed set point to a value 5 to 8 percent RPM above normal (for that Speed Control position) at Power Lever positions above flight idle. (NTS system is inoperative)
- Perform after normal engine start and start locks release.

SPEED LEVER **– LOW**

POWER LEVER **– ADVANCE SLOWLY**

- Advance Power Lever above Flight Idle to extinguish the beta light (PG Mode).

ENGINE RPM (93.5% to 96.0%) **– CHECK**

- Propeller RPM should hold at the normal PG Low setting (93.5 to 96.0% RPM depending upon aircraft installation).
- If propeller RPM increases above the normal PG low setting, the NTS system may be inoperative and corrective action is warranted.

NTS SYSTEM GROUND CHECK IS SATISFACTORY IF:
(Hydro-mechanical torque sensing system)

1. **NTS LIGHT - ON** …… When unfeathering pump is activated
2. **NTS LIGHT - OUT**…… When engine starter motor begins rotation
3. **NTS LIGHT - ON** …….. …… When power section force equals the force from the starter motor at about 15-30% RPM
4. **SUPPLEMENTARY NTS CHECK - SATISFACTORY** (see procedures above)

NOTE

REFER TO THE ENGINE MAINTENANCE MANUAL FOR COMPLETE NTS SYSTEM CHECK REQUIREMENTS.

[85]See glossary for definition of "slow turn" propellers.

OVERSPEED GOVERNOR CHECK

NOTE

THE OVERSPEED GOVERNOR (OSG) CHECK IS ACCOMPLISHED PRIOR TO DISENGAGEMENT OF THE START LOCKS; UNLESS DIRECTED DIFFERENTLY IN THE AFM/POH, THE OSG CHECK SHOULD BE MADE EVERY 50 FLIGHT HOURS FOR THE Honeywell Electronic Fuel Control AND EVERY 300 FLIGHT HOURS FOR THE WOODWARD AND BENDIX FUEL CONTROL SYSTEMS, PRIOR TO EACH FLIGHT WHEN AIR STARTS ARE TO BE INTENTIONALLY MADE, IF THERE IS ANY INDICATION OF A MALFUNCTION, OR WHEN ANY MAINTENANCE OR ADJUSTMENTS INVOLVING THE ENGINE CONTROL SYSTEM HAVE BEEN PERFORMED.

- Accomplish in a clean area, clear of obstructions, objects and debris on either side or behind.
- Ensure that the feather and fuel shutoff valves have been tested.
- Ensure that wheels are chocked and brakes are set.
- It is recommended that only one engine is checked at a time.

SPEED LEVER – HIGH RPM

- RPM levers “HIGH” RPM or as recommended in AFM / POH.

POWER LEVER – ADVANCE

- Slowly advance power lever toward “MAX”.
- While moving power lever toward “MAX”, proper OSG function is verified when RPM stops increasing between 104 and 105 percent RPM.
- During the OSG check, it is not necessary to advance the power lever fully forward – only advance as required to verify OSG function.
- Observe Operating Limitations as listed below or as listed in AFM/POH.

RPM OPERATING LIMITATIONS

Condition	Operating Limits
(Engine RPM in %)	
100.0 – 101.0	Normal Continuous
101.0 – 101.5	5 minutes
101.5 – 105.5	30 seconds
105.5 – 106.0	5 seconds
106.0	NEVER EXCEED

ENGINE RIGGING / GROUND CHECK

NOTE

ENGINE RIGGING/GROUND CHECKS SHOULD BE ACCOMPLISHED AT LEAST EVERY 100 HOURS, FOLLOWING ENGINE MAINTENANCE AND WHENEVER A HEAVY GROSS WEIGHT AT HIGH ALTITUDE OR HOT DAY TAKE OFF IS REQUIRED (OR AS SPECIFIED IN THE APPROPRIATE AFM/POH).

POWER LEVER (S) – GROUND IDLE

ENGINE SPEED LEVER (S) – LOW RPM

- Note correct and symmetrical engine indications.

ENGINE SPEED LEVER (S) – HIGH RPM

– Note 96.5 +/- .5 percent RPM and symmetrical engine indications.

POWER LEVER (one engine at a time) – REVERSE

– smoothly apply full REVERSE POWER, noting 94.5 percent RPM MINIMUM[86] and symmetrical engine indications. (NOTE AFM, POH, SOP LIMITATIONS OR RESTRICTIONS ON USING STATIC REVERSE).

[86]NOTE: Some aircraft have a Prop Governor Low setting of 96% RPM (Consult AFM/POH).

NOTE

ENGINE RPM IN EXCESS OF 94.5% (or as in footnote 86) INDICATES THE PROP GOVERNOR LOW SETTING IS MALADJUSTED OR A POSSIBLE NTS SYSTEM MALFUNCTION.

POWER LEVER (one engine at a time – TOWARD TAKEOFF

– Advance power lever toward "TAKEOFF" noting effective Propeller Governing at 100 percent RPM.

NOTE

COLD ENGINE OIL MAY RESULT IN SLIGHTLY HIGHER PROPELLER GOVERNING RPM. WHEREAS, HOT ENGINE OIL MAY RESULT IN SLIGHTLY LOWER PROPELLER GOVERNING RPM.

ENGINE SPEED LEVER (S) – LOW RPM

POWER LEVER (one engine at a time) – REVERSE

– With engine speed levers at "LOW" RPM, smoothly apply full reverse while observing that RPM does not droop more than 2% and that RPM increases on aircraft equipped with Underspeed Fuel Governor (USFG) reset. (Refer to appropriate AFM/POH.)

CAUTION

WITH UNDERSPEED FUEL GOVERNOR "LOW", DO NOT ALLOW THE ENGINE RPM TO DROOP (DECREASE) MORE THAN 2 PERCENT BELOW NORMAL AND OBSERVE THAT EGT/ITT REMAINS WELL WITHIN LIMITS.

CAUTION

IF ENGINE RPM DROOPS BELOW 64 PERCENT RPM, IMMEDIATELY UNLOAD THE ENGINE BY RETURNING THE PL TO GROUND IDLE (GI). IF ENGINE RPM BOGS DOWN BELOW 56 PERCENT RPM, IMMEDIATELY SHUT DOWN THE ENGINE WITH THE MECHANICAL FUEL OFF SWITCH (see AFM/POH).

CAUTION

IN "MANUAL MODE," TPE331 ENGINES EQUIPPED WITH THE HONEYWELL ELECTRONIC FUEL CONTROL COMPUTER DO NOT PROVIDE UNDERSPEED GOVERNOR FUEL SCHEDULING. POWER LEVER POSITIONS AFT OF "GROUND IDLE" ARE NOT TO BE USED DURING MANUAL MODE OPERATIONS.

6.3 ABNORMAL OPS PROCEDURES

ABORT ALL STARTS WHEN . . .

- Propeller fails to rotate
- RPM does not reach 10 percent in 10 seconds
- EGT/ITT is not rising 10 seconds after 10 percent RPM is achieved
- EGT/ITT approaches start limit
- (See Chapter 5.3 LIMITATIONS)
- No oil pressure indicated as the engine speed reaches ground idle RPM.
- RPM stops increasing prior to reaching normal ground idle RPM.
- Any unusual noise or vibration occurs
- Engine instruments indicate abnormal conditions

RESTARTS AFTER AN ABORTED ENGINE START

If a start attempt was aborted due to no combustion or excessive turbine temperature, a "clearing" or engine "venting" is recommended prior to another start attempt.

1. CLEARING (VENTING) ENGINE – ACCOMPLISH

- To vent the engine, use the starter switch to motor (crank) without fuel and ignition to approximately 10-15% RPM. Allow the engine to come to a complete stop before proceeding. This process clears the engine of residual fuel or vapors.

2. NORMAL ENGINE START – INITIATE

- (See normal ops procedures chapter 6.1)

ENGINE START WITH HIGH RESIDUAL ITT / EGT

1. COOLING – ACCOMPLISH

- If the engine has been shut down within the preceding hour, the residual turbine temperature may be such, especially on a hot day, that motoring to cool the engine is desirable. This is accomplished by manually motoring the engine without fuel and ignition up to 15% RPM after which the temperature should be close to or below the recommended restarting limit.

CAUTION

AVOID DISENGAGING AND RE-ENGAGING THE STARTER WITH THE PROPELLER IN MOTION.

2. MANUAL ENGINE START – ACCOMPLISH

- Refer to the AFM/POH recommended restarting limits and procedures.

SHAFT BOW

WARNING

NEVER ATTEMPT TO GROUND START THE ENGINE IF SHAFT BOW EXISTS OR IF UNEXPLAINED RESISTANCE TO HAND ROTATION IS PRESENT.

NOTE

ROTATIONAL RESISTANCE DUE TO SHAFT BOW IS UNUSUAL OUTSIDE THE INITIAL 25 TO 30 HOURS OF OPERATION FOLLOWING REPLACEMENT OF THE INTER-STAGE AIR SEALS WITHIN THE ENGINE.

- Shaft Bow is known to occur rarely and only between 10 and 45 minutes after a ground engine shutdown upon completion of flight or a high power run-up.
- Following engine shutdown (no forward airspeed), hot-air eddy currents are generated within the static engine.
- With no airflow through the engine, heated internal air rises, leading to a thermal gradient vertically through the engine.
- Cooling starts from the bottom upwards, which causes the main rotating group to be slightly hotter in the upper half, resulting in a slightly bowed shaft.
- In this situation, when the propeller is turned by hand, contact may be noticed between the interstage turbine seals and the stationary abradable seal surfaces.
- If shaft bow is suspected during the pre-flight inspection:

PROPELLER – ROTATE BY HAND

- Rotate in normal direction of rotation in order to avoid damage to carbon brushes in the starter/generator.
- Stop rotation of the propeller at the point of highest resistance, which relates to 180 degrees displacement of the main rotating group (hotter half of the shaft is now at the bottom).
- This position allows the thermal gradient to neutralize as cooling continues.
- Allow approximately three minutes, depending upon ambient variables.
- After this additional cooling, check again for rotational freedom.
- If complete freedom of rotation is not obtained, repeat process until complete freedom of rotation is obtained.

OPERATION IN ICING CONDITIONS

Engine inlet anti-ice (inlet heat) should be used during all flight in potential icing conditions; precipitation or visible moisture (including clouds or fog) at an outside air temperature of +10° C (+50° F) or colder (or an IOAT[87] as specified in the approved AFM) is considered to be a potential icing condition.

CAUTION

WHEN ICING CONDITIONS DO NOT EXIST, THE INLET ANTI-ICING SHOULD NOT BE USED ABOVE 10° C (50° F) AMBIENT CONDITIONS FOR MORE THAN 10 SECONDS.

If the use of inlet heat is inadvertently delayed upon encountering icing conditions, ice may accumulate on engine and airframe inlet surfaces. In such instances, subsequent use of engine inlet anti-ice can cause ice shedding and ingestion, which may cause a flameout. Therefore, if ice has accumulated, turn “ON” continuous ignition on all engines prior to de-icing.

[87]IOAT = Indicated Outside Air Temperature

Moreover, it is recommended that engine ignition be turned “ON” prior to or with the use of inlet anti-ice. It is further recommended that engine ignition remain “ON” (or “ARMED” if so equipped)[88] until such time as any possible ice accumulations on surfaces adjacent to the engine inlet (propeller blade root and spinner, etc.) nose and underside of the aircraft have shed. Several flameouts have reportedly occurred following descent out of icing conditions into warmer air. Ice accumulation can, under some conditions, be quite difficult to detect visually. Do not turn ignition system “off” until ice shedding is completed.

Dependent upon the specific aircraft, the use of the ignition system may be subject to duty cycle limitations. The specific AFM/POH should be reviewed for operational procedures for flight in icing conditions[89].

RECOMMENDATIONS

(1) Review AFM/POH procedures relating to powerplant ice protection and the use of ignition in flight should be reviewed in the aircraft flight manual.
(2) The recommendations discussed above, particularly those recommendations on the use of ignition should be reviewed by all pilots and/or flight crews.
(3) The procedures recommended in this document are general in nature and are intended only to supplement approved aircraft flight manual procedures.

E E C or I E C “MANUAL MODE”

The TPE331-8 and TPE331-10N utilize an Electronic Engine Control (EEC) providing total engine control and the TPE331-14/-15 a digital, Integrated Engine Control (IEC) providing torque/temp limit calculations and indications. In both cases manual mode operation may be used in the event of electronic system failures.

[88]See also "Ignition System"
[89]Depending on the type of ignition exciter units installed, system might be subject to a duty cycle limitation. Refer to OI331-11R1, or most recent revision.

THE TPE331-8/-10N INSTALLATION

If an EEC problem occurs before takeoff, it should be corrected prior to flight.

If an EEC problem is experienced after takeoff and operational conditions permit, the power lever should be retarded and the cockpit EEC control switched to Manual Mode. Engine parameters limits must then be closely monitored and controlled without the assistance of torque and temperature limiters and requires utilizing the appropriate flight manual tables for limitations.

Operational conditions permitting, the EEC switch may be returned to "ON" at a reduced torque to determine if circuits will reset. If they do, electronic engine control and normal protection should be available. If engine operation is normal, the switch should be left "ON" and the flight continued. If normal operation does not occur, the flight should be continued in Manual Mode on both engines. Landing with the TPE331-8/-10N engine must be made with engines in modes matched to avoid possible asymmetric drag during approach and on the landing rollout.

IN THE TPE331-14/-15 INSTALLATION

If the IEC fails or transfers to manual mode, the VRL[90] indications as well as torque and temperature-limiting functions are disabled; making it necessary to consult correction charts to determine maximum allowable turbine temperature (refer to the AFM/POH, IEC - manual/off).

EXTREME COLD WEATHER OPERATIONS

Honeywell recommends the use of a well-maintained, properly adjusted ground power unit or aircraft APU when starting at ambient temperatures below 12° C (54° F). If an APU or GPU is not available, be sure that the aircraft batteries are fully charged, "Series" selected if appropriate and starts monitored carefully.

[90]See Systems, Chapter 4.11 "Variable Redline (VRL)."

Preflight carefully, remembering to check for frozen precipitation in the inlet, prop spinner and tailpipe. Pull the prop through 3-4 propeller revolutions to move the oil in the system and to reduce the resistance the starter will have to overcome when the start is initiated.

Monitor prop rotation rate and bus or battery voltage at start initiation, then observe - EGT/ITT rise prior to 18% RPM, - RPM rate of increase, - turbine temperature until RPM has stabilized. Use fuel enrichment intermittently and judiciously on non auto-start engine models to help acceleration - Observe Chapter 5.3 LIMITATIONS.

6.4 ENGINE SHUTDOWN IN FLIGHT AND AIRSTART PROCEDURES DURING TRAINING OR MAINTENANCE TEST FLIGHT[91]

WARNING

THE APPLICABLE NTS SYSTEM GROUND CHECK MUST BE PERFORMED PRIOR TO AN INTENTIONAL INFLIGHT ENGINE SHUTDOWN.

NOTE

THIS DOCUMENT IS NOT INTENDED TO SUPERSEDE APPROVED AIRCRAFT PUBLICATIONS OR TPE331 TECHNICAL DOCUMENTS. THE APPROVED AFM/POH IS ALWAYS THE FINAL AUTHORITY FOR OPERATION OF THE AIRCRAFT.

Prior to engine shutdown:

OPPOSITE ENGINE OPERATION – NORMAL

ELECTRIC LOAD – REDUCE

- Reduce the electrical load below single generator capability per AFM/POH.

[91]If approved.

BLEED AIR (SHUTDOWN SIDE) – OFF

SYNCHRONIZER/SYNCROPHASER – OFF

POWER LEVER (SHUTDOWN SIDE) – FLIGHT IDLE

- Reduce the power to flight idle (or slightly above, to silence gear horn) for one minute to assist in uniform cooling. This will also reduce thermal gradient when the engine is shut down.

WARNING

PLACING PL BELOW FLIGHT IDLE IN-FLIGHT IS PROHIBITED

GENERATOR (SHUTDOWN SIDE) – OFF

ENGINE "STOP/RUN" CONTROL (SHUTDOWN SIDE) – "STOP"

NTS FUNCTION (SHUTDOWN SIDE) – OBSERVE

- A slight pulsing is typically observed due to feather/NTS valve action; indicating the proper function of the negative torque sensing system.

RPM ROLL-DOWN TO 30% – OBSERVE

- The RPM should roll-down to approximately 30% within 40 to 60 seconds after shutdown, depending upon engine model (rate specified in AFM/POH).

ENGINE (RPM AT 30%) – FEATHER

- Feather the engine at 30% RPM minimum or within 1 minute after fuel shutoff.
- It is important not to allow the engine to windmill between 18% to 28% RPM (shaft critical RPM) on TPE331-1 through -12 or between 14% to 20% RPM on TPE331-14/-15 engines.

CAUTION

CONTINUOUS OPERATION/WINDMILLING WITHIN THE SHAFT CRITICAL RPM RANGE MAY CAUSE ENGINE DAMAGE.

After engine shut down is completed:

FEATHER CONTROL	**– "NORMAL"**
UNFEATHERING PUMP	**– ACTUATE MOMENTARILY**

- With the feather control set to "Normal", momentarily actuating the unfeathering pump will cause the engine to rotate slowly (about 10 percent RPM) - This residual rotation aids in balanced engine cooling.

- A sideslip may induce windmilling in the wrong direction.

CAUTION

AVOID WINDMILLING ROTATION IN THE WRONG DIRECTION IN ORDER TO AVOID DAMAGE TO CARBON BRUSHES IN THE STARTER / GENERATOR.

ENGINE WINDMILLING RPM LIMITATIONS

Windmilling (RPM in %)	Operating Limits	Action if Exceeded
28 – 100	1 minute max.	Feather propeller
18 – 28	DO NOT ALLOW THE ENGINE TO WINDMILL IN THIS RPM RANGE.	Feather propeller
10 – 18	5 minutes max.	Feather propeller or reduce airspeed to bring within tolerance/limit.
5 – 10	30 minutes max.	
0 – 5	Continuous	Avoid reverse rotation[92]

EMERGENCY SHUTDOWN

In the unlikely event of a shutdown in flight due to fuel starvation, or an engine problem, the negative torque sensing system will reduce propeller drag. This reduces the urgency of feathering the engine and allows the pilot to concentrate on control of the aircraft.

Prior to engine shutdown in a multi-engine aircraft:

NOTE

FOR SINGLE ENGINE AIRCRAFT REFER TO OI 331-18 AND TO THE APPROPRIATE EMERGENCY PROCEDURES IN THE AFM/POH.

ENGINE WITH PROBLEM – DETERMINE

FAILED ENGINE:

- With both feet on the rudder pedals:
- "Dead foot - dead engine", except as outlined in the most current revisions of OI 331-12. (Loss of drive between engine driven fuel pump and fuel control unit.)
- Compare torque and ITT, EGT, Fuel Flow, and RPM indications.

ENGINE FAILURE IMMINENT:

- Re-confirm which engine has a problem.

[92]A side slip in the wrong direction can cause the prop to windmill in the opposite direction of normal rotation.

OPPOSITE ENGINE INDICATION – CHECK NORMAL

- Insure that opposite engine is operating properly.

ENGINE WITH PROBLEM – FEATHER

- When it is positively determined which side presents the problem, the engine may be feathered and should reach feather configuration within 10 seconds.

> **NOTE**
>
> **WHETHER THE ENGINE IS TO BE AIR STARTED OR NOT, SOME FORWARD RESIDUAL PROPELLER ROTATION IS DESIRABLE FOR UNIFORM COOLING.**

POWER LEVER FAILED ENGINE – FULL FORWARD

- Moving the power lever fully forward drives the prop blade to the lowest angle of attack in the event the feather valve or NTS system has not functioned properly (Beta Follow-up).

CONSULT AFM/POH FOR COMPLETE/SPECIFIC PROCEDURES

AIRSTART

Single shaft turboprop engine air starts are very straightforward. The low amperage requirements to actuate the propeller unfeathering motor and the power of the propeller to rotate the engine provide excellent air start capability.

Prior to an airstart:

ALTITUDE/AIRSPEED – CHECK

- The TPE331 starting envelope is from sea level to 20,000 feet at an air speed between 100 and 180 KCAS (refer to the AFM/POH).
- To enhance successful air starts after a recent in-flight shutdown, it is desirable to keep the engine rotating at low RPM to assure adequate cooling, by setting the following conditions:

FEATHER CONTROL – "NORMAL"

UNFEATHERING PUMP – ACTUATE MOMENTARILY

NOTE

IT IS DESIRABLE THAT ENGINE TEMPERATURES ARE BELOW 300° C ITT OR 200° C EGT PRIOR TO INITIATING THE AIR START.

Initiating Airstart:

FEATHER CONTROL "NORMAL" – VERIFY

RPM/SPEED/CONDITION LEVER – SET

- The engine RPM/Speed/Condition Lever should be set to match the operating engine or as specified in the AFM/POH.

POWER LEVER – SET

- The power lever should be approximately 1 inch forward of FI (Flight Idle), or as per AFM/POH.

FUEL TANKS/BOOST PUMPS – ON

- The fuel tanks and boost pumps should be set as recommended in the AFM/POH.

INITIATE START – PER AFM/POH

CAUTION

DO NOT ENGAGE THE STARTER DURING AN AIR START. THE HIGH TORQUE REQUIREMENTS OF A FEATHERED PROPELLER WILL DAMAGE THE STARTER.

- Visually check that the propeller starts to turn while actuating the unfeather pump.

CAUTION

IF THE PROPELLER FAILS TO ROTATE, ABORT THE START AND SHUT OFF THE UNFEATHERING PUMP.

- Monitor indication of fuel flow and ignition between 10 and 20 percent RPM.

MANUAL FUEL ENRICHMENT – AS REQUIRED

- Use manual fuel enrichment until initial turbine temperature rise is observed and to aid engine acceleration, as required on non-"auto enrichment" engines.

NOTE

IF A TURBINE TEMPERATURE RISE IS NOT OBSERVED BY THE TIME THE ENGINE REACHES 18% RPM[93], IMMEDIATELY DISCONTINUE THE START WITH THE MANUAL FUEL SHUTOFF VALVE. RESIDUAL ROTATION sIS DESIRABLE TO PURGE ANY UNBURNED FUEL FROM THE ENGINE.

TEMPERATURE RATE OF RISE – MONITOR START LIMIT

OIL PRESSURE – CHECK NORMAL

CAUTION

ABORT START IF OIL PRESSURE IS NOT RISING PRIOR TO STABILIZED GI RPM.
MONITOR SMOOTH AND CONSTANT RPM RATE OF RISE - IF RPM STAGNATION OCCURS, IMMEDIATELY FEATHER THE ENGINE.

NOTE

WITH COLD ENGINE OIL THE PROPELLER MAY BE SLOW TO UNFEATHER AND THE GOVERNING RPM MAY BE SLIGHTLY HIGH UNTIL OIL WARMS.

[93]Avoid dwelling in the critical RPM range (18-28%)

6.5 AvGas O.K. FOR EMERGENCY FUELING

The purpose of a flight test is to assure symmetry of engine torque, power levers, satisfactory operation within all limits and proper functioning of all propulsion related systems. At a specific torque, other engine parameters may vary within limits due to engine tolerances, instrument calibration and installation differences. The cruise check taken at frequent, regular intervals can be most helpful in monitoring engine condition, troubleshooting and adjustments.

Aviation gasoline can be used for emergency fueling of Honeywell TPE331 engines, as long as the avgas is used in accordance with the approved AFM/POH. Pilots are urged to use a minimum of avgas mixed with remaining jet fuel to safely fly to a jet fuel source (including reserves in accordance with pertinent Aviation Rules).

6.6 ENGINE MAINTENANCE TEST FLIGHT PROCEDURES

WARNING

WITH THE EXCEPTION OF THE SUGGESTED PROCEDURES FOR TRIMMING THE FLIGHT CONTROL SURFACES, THE FOLLOWING ENGINE MAINTENANCE TEST FLIGHT PROCEDURES ADDRESS ONLY GENERIC ENGINE OPERATIONS. THEREFORE, THE APPROPRIATE AFM/POH MUST BE CONSULTED IN ORDER TO COVER ALL PERTINENT PROCEDURES DURING ALL ENGINE MAINTENANCE TEST FLIGHT MANEUVERS. (PHASE #1 THROUGH PHASE #4).

NOTE

CONSULT THE APPROPRIATE ENGINE AND/OR AIRFRAME MAINTENANCE MANUAL FOR ADDITIONAL MAINTENANCE TEST FLIGHT PROCEDURES AND/OR RECOMMENDATIONS.

The very rapid power response of single-shaft turboprop engines make it necessary to assure that they are symmetrically rigged. Asymmetrical rigging may result in split engine parameters, split power levers, difficulty in setting power and poor landing characteristics.

Time should always be provided for a complete and adequate maintenance test flight to assure all engine systems function properly throughout the entire flight envelope. Therefore, recording engine parameters and flight characteristics are essential for effective maintenance troubleshooting and adjustment procedures.

The "Maintenance Test Flight Card" was designed for this purpose and the data should be transmitted to maintenance for appropriate actions.

As a minimum, Honeywell recommends the following procedures after TPE331 engine and/or control replacement or adjustment to assure that symmetrical rigging and proper rate of descent for most operational conditions is provided.

CAUTION

DUE TO INCREASED ATTENTION TO INSTRUMENTS WHILE CONDUCTING AN ENGINE MAINTENANCE TEST FLIGHT IT IS RECOMMENDED TO HAVE ONE CREW MEMBER TAKE THE DATA WHILE THE OTHER IS CLEARING THE AREA.

NOTE

ALL AFM/POH PROCEDURES AND OPERATIONAL LIMITS MUST BE OBSERVED.

The "Maintenance Test Flight Card"[94] is used to record relevant atmospheric, engine and aircraft parameters. However, before meaningful readings can be taken, the aircraft must be trimmed properly. The following is a suggested procedure for trimming:

While flying straight, level and un-accelerated:

THRUST (TORQUE) – MATCHED INDICATORS

- Assuming torque indicators are correct; or apply correction factor - if known.

[94]Enlargement and/or copying of the FLIGHT TEST CARD is encouraged (see page 89).

TRIM TABS (AILERON, RUDDER) **– INDICATORS NEUTRAL**

WINGS **– LEVEL**

- Check wing tips against the horizon; if not level, bring level with aileron pressure.

AILERONS **– TRIM**

- While holding wings level, trim off aileron pressure.

HEADING **– MONITOR**

- Pick a cardinal heading and monitor steady heading, wings level;

RUDDER **– TRIM**

- While holding a constant heading with the rudder, trim off rudder pressure.

NOTE

BARELY TOUCHING THE CONTROLS, THE AIRCRAFT IS PROPERLY TRIMMED WHEN WINGS REMAIN LEVEL AND NO HEADING CHANGES ARE OBSERVED.

GROSS WEIGHT, OAT, PRESS. ALT– NOTED ON CARD

- Maintenance test flights should be conducted at an average cruise gross weight and at a safe altitude (Minimum 5,000 feet AGL[95] or as stated in AFM/POH).

CABIN PRESSURIZATION **– SET FOR LANDING**

ATMOSPHERIC CONDITIONS **– SMOOTH (If possible)**

ENGINE RPM LEVERS **– SET "HIGH RPM"**

SYNCHRONIZER / SYNCHROPHASER **– OFF**

CLEARING TURNS **– PRIOR TO EACH PHASE**

[95]Above Ground Level

ENGINE MAINTENANCE TEST FLIGHT PHASE # 1

ENGINE POWER, MAX CRUISE – SET

- Match torque for matched thrust. Use AFM/POH data for maximum cruise power setting at high RPM.

AIRCRAFT TRIM – SET

- See above suggested procedures for trimming.

ENGINE INSTRUMENTS – CHECK

- Check the engine instruments for proper readings and symmetry.

STABILIZED AIRSPEED – RECORD PARAMETERS

- After the airspeed has stabilized record data as indicated on Test Flight Card.

ENGINE MAINTENANCE TEST FLIGHT PHASE # 2

POWER LEVERS – FLIGHT IDLE

- Pull power levers smoothly and rapidly to flight idle.

AIRCRAFT/ENGINE RESPONSES – OBSERVE

- This includes RPM, fuel flow, which direction the aircraft yawed (if any) and if there was any indication of NTS action, as indicated by rhythmic pulse.

OBSERVED RESPONSES – RECORDED

- Maintaining level flight, record data as indicated on Test Flight Card

ENGINE MAINTENANCE TEST FLIGHT PHASE # 3

With the power levers still at Flight Idle, slow to the appropriate V/lo - V/fe.

LANDING GEAR AND FULL FLAPS – EXTEND
YAW TENDENCY – NOTED / RECORDED

- As the aircraft slows, note any tendency to yaw and record the direction, if any.

POWER LEVERS – FLIGHT IDLE

APPROACH AIR SPEED – ESTABLISH/ MAINTAIN

- Lower the nose to maintain an approach speed consistent with the AFM/POH recommendations for aircraft configuration and weight.

FUEL FLOW, RPM, RATE OF DESCENT – NOTED

- When approach and descent speeds are stabilized, record data for both engines, as well as any yaw noted, as indicated on Test Flight Card.

For example: If the aircraft rate of descent on this test was in excess of the AFM/POH or MM recommendations for the configuration and weight, and the aircraft yawed to the right, assuming the propeller blade angles were adjusted correctly, it is reasonable to conclude that the right engine Flight Idle Fuel Flow is set too low. The Fuel Flow readings indicated in the cockpit may confirm this. If Maintenance, upon receiving this report, adjusts the right Flight Idle Fuel Flow "up" to better match the opposite engine, it should serve to correct both the yaw and the excessive rate of descent.

ENGINE MAINTENANCE TEST FLIGHT PHASE # 4

WARNING

PILOTS MUST REVIEW THE APPROPRIATE PROCEDURES OF HOW TO RECOGNIZE INCIPIENT STALLS, HOW TO RECOVER FROM STALLS AND HOW TO PREVENT SPINS BEFORE INITIATING ENGINE MAINTENANCE TEST FLIGHT PHASE #4.

If safe aircraft handling and altitude is assured, and if engine settings permit safe continuance, complete the maintenance test flight as follows:

AIRSPEED – REDUCED

- Level off from the descent and allow the airspeed to slow toward stall speed.
- Check AFM/POH for VS data and minimum safe altitude above terrain.

SYMMETRICAL RPM DROOP – NOTED

- RPM should not droop below 96%

YAW TENDENCY – NOTED

- Check for any yaw tendency at or close to the stall.

ENGINE INSTRUMENT ASYMMETRY – NOTED

STALL RECOVERY PROCEDURES – INITIATED

- Resume normal flight conditions as per AFM/POH stall recovery procedures.

RPM DROOP, YAW, ENGINE ASYMMETRY – RECORDED

- After resuming normal flight, record yaw and engine asymmetry on Test Flight Card.

6.7 OPERATIONAL SUGGESTIONS

PILOTS CAN MAKE THE DIFFERENCE IN ENGINE OPERATING LIFE AND MAINTENANCE COSTS.

CONSIDERATION OF THE FOLLOWING SUGGESTIONS, NORMAL GOOD AIRCRAFT HANDLING PRACTICES, CAREFUL ENGINE OPERATION AND ADHERENCE TO OPERATING LIMITATIONS CAN ENHANCE PERFORMANCE, IMPROVE ENGINE LIFE AND REDUCE COST OF OWNERSHIP:

- A periodic review of the basics in your Aircraft Flight Manual will help refresh you on operating techniques and enhance the chance for trouble free operations.

- Assure good battery maintenance in accordance with the battery manufacturer's recommendations.

- Use reliable APU or GPU when temperatures are less than 12º C (54º F) or when on-board battery is marginal (see AFM/POH for battery requirements).

- Monitor start voltage droop[97], RPM acceleration and start temperatures for consistency under similar starting conditions. If you notice an increase in temperature peaks on successive starts (even within limits) you may have a fuel scheduling, an electric (BATT/APU/GPU) and/or a starter problem. Record changes under similar ambient starting conditions.

- Carefully observe ITT/EGT and RPM rate of rise and limitations during engine starts. Record any RPM or ITT/EGT overshoot peaks and time in excess of limits.

- Do not exceed aircraft AFM/POH prescribed limits.

NOTE

REMEMBER THAT TIME SPENT IN EXCESS OF RPM, TORQUE AND TEMPERATURE LIMITS CAN REDUCE THE LIFE OF BEARINGS AND HOT SECTION COMPONENTS.

- Use conservative taxi speeds for better warm up to prepare engine static and rotating assemblies for takeoff stress.

- Consider a reduced power takeoff if it is safe and the flight manual contains appropriate information and authorization. This results in significant temperature reduction, lowering hot section inspection and repair costs later. Airlines use this technique extensively, also saving a considerable amount of fuel. If using reduced power, periodically use full takeoff power to confirm its availability. Honeywell engines are designed, tested and certified to operate to flight manual limits.

- Use conservative rate of power lever movement and always monitor engine parameters for proper response and symmetry. You'll have better symmetrical thrust control, acceleration, and performance as well as minimizing the potential for RPM and temperature excursions.

- Conduct climb and cruise operations at 96-97% RPM, observing turbine temperature limits, except when conditions dictate MCP[98] engine power.

[97]If equipped with a volt meter
[98]Maximum Continuous Power (See definition in Limitations)

- After acceleration to cruise airspeed, be conservative in cruise power settings, staying within the recommended cruise limits of your aircraft flight and performance manual. Conservatism in climb and cruise power settings, still assuring safe flight, can save in long term operational costs.

- As an aid to maintenance, record all engine parameters during stabilized flight frequently, particularly noting any changes from previous flights.

- In salt-laden atmospheric conditions, climb to and cruise at least 5000 ft. above body of water, as quickly as practical.

- For descent, reduce power slowly to provide required rate of descent.

- Use single-shaft engine's rapid response when essential, but otherwise be as conservative on rapid power changes as operational conditions permit.

- After landing, use flat pitch (GI detent) on long runways, reverse when required.

- Avoid shutdown while taxiing. This allows thermal stabilization of hot section components. Three minutes at low power (Power Lever - "Ground idle" or slightly higher and RPM lever - "Low") is recommended.

- Use caution on non-paved runways to avoid prop damage and debris ingestion, especially during reversing.

- Allow temperatures to stabilize at idle (Speed Lever low) for 3 minutes before shutdown (including taxi time at low RPM). This is most important following high power ground operations.

- At shutdown, periodically time the roll-down to establish a norm. Roll-down generally varies from 30-60 seconds depending on accessory loading, propeller type and wind direction/velocity. Look for a useable average. If both engines are shutdown at the same time, propellers should stop within 15 seconds of each other.

- On maintenance test flights use Aircraft Checklist and Test Flight Card.

- Use Maintenance Test Flight Guide and Maintenance Test Flight Card on test and training flights to familiarize new pilots and gather data bank.

- When training schedule permits, check engine parameters and record instrument readings for maintenance records.

- Log engine cycles, defined as an engine run involving engine start, aircraft take off, landing and engine shut down.

NOTE

ONE APR EVENT COUNTS FOR FOUR CYCLES (Ref. AFM/POH). CYCLE COUNTING FOR SPECIAL USE OPERATION, DEFINED AS PERFORMING MULTIPLE TAKEOFFS AND LANDINGS FOR EACH ENGINE START/SHUTDOWN CYCLE, REQUIRES COMLIANCE WITH ALERT SERVICE BULLETIN TPE331-A72-2111,

- Complete post flight inspection, looking for smooth engine rotation, oil and fuel bypass indicators normal, rear turbine, tailpipe and propeller conditions. For the TPE331-14/-15 engines, note the status of the IEC fault light.

- Write up discrepancies for maintenance investigation and as information for other pilots.

Help With Your Troubleshooting

You can save time and money by determining in advance just what information will be needed to diagnose a particular problem with your engine.

If possible, as soon as you think you have a problem, check with your maintenance supervisor or call a Honeywell authorized engine shop for advice on what specific data to record. If in doubt, record all engine and flight parameters. It could save you the cost of duplicating work done previously. It might also enable you to make a correction on-site, or even demonstrate that the suspected problem is not a problem at all.

The Value Of Engine Monitoring:

The necessity for a thorough preflight of an aircraft and its systems is obvious to all operators. A key element is the review of the aircraft log to see

what has been “written-up” and “corrected” previously. This “history” of discrepancies helps the pilot anticipate what to expect. A clear and concise description of a problem is also essential for maintenance to assure expeditious analysis and proper correction.

Routinely and accurately recorded engine data can provide you with a “history” of its operating condition that is useful in identifying developing problems. In some circumstances it will indicate distress in advance of a malfunction. This characteristic can be optimized through the use of a program that routinely records engine performance data. The SOAP (Spectrometric Oil Analysis Program) is another important element of engine condition monitoring.

Most airlines have recognized the advantages of in-flight performance monitoring and have developed elaborate systems for recording and analyzing engine performance data on large fleets of aircraft. The airlines estimate that they save millions of dollars each year by ‘listening’ to what their engines are telling them.

General aviation operators need not develop an elaborate “trending” system but may also benefit from the same concept by regularly listing data under similar ambient conditions;

Of particular value are periodic recordings on:

- Battery voltage before and voltage drooping during engine start.
- Peak temperature and time to idle during engine start.
- Engine RPM with power lever at “Ground Idle” and speed lever set at “Low”.
- Takeoff, climb and cruise parameters.
- Roll-down time and battery voltage after engine shutdown.

The Pilot Tips “Maintenance Test Flight Card” provides a method to routinely record data on the performance of the engines.

6.8 SERVICING INFORMATION (Fuel/oil)

Various aviation turbine fuels are authorized including Jet A, Jet B, Jet A-1, JP-1, JP-4, JP-5, JP-8 and equivalent military specifications. Authorized lubricants include petroleum products of Mobil, Shell, Stauffer, Enco, Esso, Castrol, Texaco, and Sinclair. Consult your aircraft flight manual (AFM/POH).

7 TPE331 SUPPORT, SERVICE AND TRAINING

7.1 COMMITMENT TO THE TPE331 OPERATOR

As part of the total commitment to complete customer satisfaction, Honeywell is committed to service and support general aviation and regional airlines. We are dedicated to provide quick and capable response to TPE 331 operators on a worldwide basis, with all of the maintenance, repair, overhaul and customer support resources necessary to meet the needs of the TPE operator.

Honeywell Field Service Representatives are a vital communications link between the factory-based Customer Support Department and the worldwide network of Authorized Service Centers.

The Service and Support function of Honeywell is a complete support organization for TPE331 operators. The comprehensive capabilities include maintenance, field service, overhaul and repair, parts provisioning, technical manuals, service bulletins, and technical training.

Customer Support provides the TPE331 operator with all the technical and administrative assistance necessary to help minimize downtime, primarily through Field Service Representatives and Authorized Service Centers. Technical services, such as technical manuals, training and program support are also provided. Customer Support also sanctions the network of Authorized Service Centers throughout the world. While this network is listed in current brochures, the number and locations are subject to periodic change in order to better meet the needs of operators.

Honeywell continues to develop and provide product improvements to enhance engine reliability and cost of ownership. When programs to incorporate these improvements are established, they may result in extended inspection frequency and reduced downtime for future maintenance. All TPE331 engines are subject to a similar pattern of improvement as analytical inspections, time accrual and service experience warrant such upgrades.

7.2 AOG EMERGENCY SERVICE

The first source of assistance should always be your local Field Service Engineer (FSE) or the nearest Authorized Service Center. However, Honeywell provides emergency customer support for all TPE331 operators worldwide. When emergency support is required, operators may call the Customer Operations Group (COG) in Phoenix, Arizona. This service can be reached at:

DOMESTIC
1-(800) 601-3099

INTERNATIONAL
1-(602) 365-3099

7.3 OILs, SILs, and PALs

Operating Information Letters, Service Information Letters and Pilot Advisory Letters are sometimes used by Honeywell ES&S to communicate information regarding Honeywell ES&S commercial products to operators and others associated with those products.

WARNING

OILs, SILs, AND PALs ARE NOT FAA-APPROVED AND FAA REGULATIONS DO NOT REQUIRE CUSTOMER COMPLIANCE WITH THE INFORMATION CONTAINED IN THEM. THESE DOCUMENTS ARE NOT TO BE USED IN LIEU OF AN FAA-APPROVED SERVICE BULLETIN OR MAINTENANCE MANUAL REVISION WHENEVER SUCH BULLETIN OR REVISION SHOULD BE PUBLISHED. HOWEVER, THEY MAY BE USED IN ADDITION TO A SERVICE BULLETIN OR MAINTENANCE MANUAL REVISION. IN THE EVENT OF AN INADVERTENT CONFLICT WITH FAA-APPROVED TECHNICAL PUBLICATIONS, THE FAA-APPROVED PUBLICATION GOVERNS.

An Operating Information Letter (OIL) is a document directed to pilots and engine operators that communicates operating information, which could help reduce damage to equipment or ameliorate conditions hazardous to flight safety or personnel.

A Service Information Letter (SIL) is a document containing maintenance or technical information, but is not a replacement or substitute for FAA-approved engine maintenance manuals and service bulletins.

A Pilot Advisory Letter (PAL) is used to communicate to pilots newly developed information relating to engine operation or provide background information supporting and emphasizing standardization of procedures.

To obtain a specific OIL, SIL or PAL, please contact the Honeywell Customer Operations Group (COG) in Phoenix, Arizona. This service can be reached at:

DOMESTIC
1-(800) 601-3099

INTERNATIONAL
1-(602) 365-3099

7.4 PILOT AND MAINTENANCE TRAINING

Recognizing the vital importance of well-trained pilots and maintenance personnel to satisfactory TPE331 operation, Honeywell provides comprehensive TPE331 training programs to meet the needs of service centers and owner/operators. Technical training programs are designed to provide familiarity with the mechanical features of the TPE331 and all necessary maintenance and operational procedures. Classes are held on a regularly scheduled basis and consist of several maintenance courses and a pilot familiarization course.

Pilot Familiarization

Pilots need to be knowledgeable of engine operation to obtain the best service possible, to recognize and determine severity of engine malfunctions and decide on proper operational action. This training is primarily the responsibility of the airframe manufacturer.

Honeywell offers a short course for pilots who desire a more complete understanding of the TPE331 engine. Course material includes discussion of engine limits, operational characteristics, systems, identification and corrective action for various possible malfunctions and a brief discussion of inspection requirements.

Line Maintenance

The line maintenance course is structured around the tasks required on the flight line and defined in the maintenance manual. Course content involves both classroom lecture and practical activity. Course material includes troubleshooting theory, engine construction and system operation. Engine malfunctions are analyzed, isolated, and corrective action determined according to maintenance data.

The practical use of applicable tools and test equipment limits the number of students accommodated in each class. Therefore, customers are urged to anticipate their training requirements and contact Technical Training as far in advance as possible for allocation of training slots. Classes are normally filled to capacity 30 days prior to commencement.

Line maintenance training is required for Honeywell authorized service center personnel and is recommended for all others who perform or supervise maintenance on the TPE331 engine.

Intermediate Maintenance

The intermediate maintenance course is available to original equipment manufacturers, Honeywell authorized major service centers and operators who possess or have ordered the necessary special tools and test equipment. A prerequisite to attend this course is a certificate of completion from the line maintenance course.

This course is heavily task oriented. Minimal classroom lecture periods allow for maximum exposure to "hands on" learning. We are able to accommodate only six students in each class. Therefore, all customers are urged to anticipate their training requirements and contact Technical Training as far in advance as possible for allocation for training slots. Classes are normally filled to capacity 30 days prior to commencement.

Transportation and Location

Most Phoenix area hotels provide limousine service to and from the airport. Some hotels provide transportation to and from the training school. The training school provides necessary transportation to remote run sites or manufacturing and overhaul facilities as required during the conduct of the class. To obtain further information students may call (602) 365-2833 after 0730 Phoenix time on the first day of class or may contact the hotel desk for directions.

The technical training school is located at 1944 Sky Harbor Circle, Phoenix, Arizona. (Approximately one mile from Sky Harbor Airport.) Classes commence daily at 0800.

Grades and Evaluation

It is not the intent of the technical training school to evaluate an attendee's level of proficiency or knowledge for the purpose of certifying attainment of a specific minimum acceptable level. However, records are maintained of final examination grades. The training school will furnish a confidential report of grades attained by students upon written request by their company on letterhead stationery.

Course Outline and Schedule

Honeywell TPE331 engine courses outline and schedules are contained in the technical training school's course catalog issued annually. Registration for a given year generally begins in September of the preceding year. Please contact the training school registrar at:

Phone:
1-800-306-7073 (U.S. and Canada)
1-602-365-2833 (All others)

Fax:
1-800-303-7828 (U.S. and Canada)
1-602-365-2832 (All others)

Mail:
Honeywell Aerospace Training Solutions
Attn: Registrar
P.O. Box 29003
Phoenix, AZ 85038-9003

E-Mail:
training.solutions@honeywell.com

On-Site Training

Training classes are available for your personnel at your facility. A course can be tailored to meet your specific needs; however, a lead time of 120 days is required for scheduling purposes. Charges will be quoted individually depending on course length and content. For further information and scheduling contact the Technical Training manager at (602) 365-2678.

Honeywell

MAINTENANCE TEST FLIGHT CARD

Flight No: Page:

Date: - -

Operator: _____ Type: _____

Registr.No: _____ S/N: _____

From: _____ Rwy: _____

To: _____ Rwy: _____

BOW: _____ ___

Fuel: _____ ___

Payload: _____ ___

TOGW: _____

TPE331-_____ TT Comp: 1 _____ 2 _____ T/O Ref. Power: _____

Parameter ⇓	Time at Recording Data (24-hour /Local)					
	:	:	:	:	:	:
Condition						
IOAT (°C)						
Altimeter						
Altitude (ft)						

KIAS	V V												
PLA	SLA												
_ Yaw _													
SRL or IEC	1												
	2												
TT	1												
_____	2												
Power	1												
_____	2												
RPM	1												
	2												
W_f	1												
_____	2												
Oil	TIP 1												
	TIP 2												
Rem / Used	Fuel												
Bleed													
Eng. A/I													

For a detailed explanation, contact the Pilot Advisor Group.

8 GLOSSARY

ACCELERATION - rate of; pertaining to engine start, minimum recommended rate of acceleration is about 1 percent RPM increase per second (especially in the critical RPM range

AFM - (Aircraft Flight Manual) is the most commonly used term describing officially approved pilot handbook for a specific aircraft make and model. Other terms are: Crew Manual, Manufacturer's Operating Manual, Pilot Operating Handbook, Pilot Operating Manual, and other.

AGL - Height in feet Above Ground Level.

Airflow Stations - Numbered locations along the turbine engine's airflow path for easy identification of engine parameters. (see page 12)

Ambient Air - The atmospheric air surrounding all sides of the aircraft or engine.

Angle of attack (AOA) Propeller - Propeller blade angle of attack varies with airspeed and whether the propeller is engine driven or windmilling.

Annular combustor – A cylindrical one piece combustion chamber.

APR - see Automatic Performance Reserve.

Atomizer - A device that produces rapid evaporation of the fuel for combustion.

Augmentation Options - used to improve engine performance on a hot day and/or high altitude conditions. Also, in the event of an engine failure, to boost power on the remaining operating engine(s). See also APR, CPR, Water-methanol injection).

Automatic Performance Reserve - In the event of an engine failure, APR automatically increases power on the remaining operating engine(s).

AWI - Alcohol-Water Injection, see Water-Methanol Injection system.

Axial flow - Motion along a real or imaginary straight line upon which an object rotates.

Axial flow compressor - Compressor airflow parallel to the axis of the engine.

BETA Mode - TPE331 engine operational mode in which the propeller blade angle is controlled from the power lever.

Beta Follow-up - With a failed/shutdown and windmilling TPE331 engine and provided the power lever fully forward, Beta Follow-up drives the propeller blades toward the feathered position, yielding the lowest possible drag in the event of a feather valve or NTS system malfunction.

Blade - A rotating airfoil in the compressor or turbine section.

Blowout - A flameout due to either excessively rich or lean fuel/air mixture (hence "rich blowout" or lean "blowout").

Bog down - Loading beyond the engine's torque producing capability at a given engine RPM. Allowing a continued bog down leads to the decay of engine RPM and high localized turbine temperature, resulting in engine damage.

Bypass ratio – a classification within the turbofan engine group, which compares the mass airflow of the fan with that of the compressor.

CAUTION – an operating procedures, techniques, etc., which could result in damage to equipment if not carefully followed.

CAWI - Continuous Alcohol-Water Injection, see Water-Methanol Injection system.

Centrifugal flow compressor - An impeller shaped device which draws in air at its center and hurls the air outward at a high velocity into a diffuser.

CFR - relates to Code of Federal Regulation (formerly FAR). FAR Part 25 is now "Title 14 CFR Part 25".

Chord Line - is an imaginary straight line (shortest distance) between the leading edge and the trailing edge of an airfoil, which is a cross section of a propeller blade or a wing.

Clearing the engine (Motoring) - Removing unburned fuel from the combustion chamber by rotating the engine with the starter motor.

Clearing the area - Visually scanning the airspace to reduce the potential for a mid-air collision.

Combustor - The section of an engine in which atomized fuel is combined with compressed air and burned the create thermal energy.

Compressor - A device, driven by a turbine, that creates pneumatic energy by drawing in ambient air and compressing it.

Compressor stage - Set of impellers or rotor blades. The TPE331 has two sets of impellers (2 centrifugal compressor stages).

Compresor stall or surge - A condition usually limited to an axial-flow compressor in which smooth airflow is disrupted, resulting in a rise of EGT/ITT, RPM fluctuation, and/or flameout may be accompanied by engine damage.

CONDITION LEVER (CL) – Speed Lever when linked to the manual feather valve and the fuel solenoid manual shut off lever.

Continuous Performance Reserve – In the event of an engine failure, enables unaffected engine(s) to boost power above target power.

CPR - see Continuous Performance Reserve.

Critical speed - The speed(s) at which a rotating component is most sensitive to the onset of dynamic instability (harmonic vibration).

Density Altitude (DA) - Equals Pressure Altitude (PA) corrected for non-standard temperature.

Diffuser - The part of a compressor where divergent vanes slow the high velocity air and thus convert it to high pneumatic pressure.

Droop - A decrease in speed, voltage, air pressure, etc., which results when a load is applied.

Dry engine - Engine efficiency is based on performance data without AWI (see also Wet engine).

EEC - see Electronic Engine Control.

EGT - Exhaust Gas Temperature. See also Exhaust Gas Temperature

EGT (%)- Some aircraft may use % EGT indicators. In that case, maximum allowable indicated EGT equals 100%.

Electronic Engine Control (EEC) - electrically controls engine power and RPM.

Engine cycle - One complete engine cycle is defined as an engine start, takeoff, landing and engine shutdown. A ground run only (engine start followed by engine shutdown) would not constitute an engine cycle.

Engine station - (see Airflow Stations).

Exhaust Gas Temperature – Gas flow temperature measured at the turbine exit. Sometimes referred to as T5.

False start – An aborted engine start.

FCU – see Fuel Control Unit

Flame out – An unintentional extinction of combustion due to a Blowout.

Flat rating – is usually an airframe SHP limit, governed by airframe structural integrity and aircraft controllability (Vmc, etc.). Sometimes, flat rating is based on a gear box limitation.

F.O.D. – Foreign Object Damage.

Fuel Control Unit (FCU) – The main fuel-metering device, which receives input signals from the power lever, P2T2 sensor, compressor RPM and P3 pressure.

FOD – see Foreign Object Damage)

Foreign Object Damage – Compressor damage from ingestion of foreign objects into the engine.

Fuel flow – The rate at which fuel is consumed by the engine expressed in pounds-, Kg- or gallons-per-hour.

Fuel nozzle – see Atomizer.

GPU – Ground Power Unit

Guarding – To guard with respect to engine operation; to wait and to be ready – i.e. holding a shut-off handle so as not to waste time in the event an immediate shut down action is required.

High bypass ratio – of 4:1 or higher (see Bypass ratio).

Honeywell ES&S – Honeywell Engines, Systems & Services is comprised of all Honeywell's engines and APU businesses, environmental control systems, electric power, and engines systems and accessories businesses. In addition, it contains all of Honeywell's Repair and Overhaul, Distribution, Supply Chain Services, and Hardware Products Group.

Horsepower – One horsepower is the force required to raise 550 pounds at a rate of one foot per second.

Hot start – An engine start that results in exceeding specified temperature limits.

Hung start – A condition of abnormally low or stagnant engine acceleration after normal ignition.

Idle – The lowest continuous engine operating speed authorized.

IEC – See Integrated Electronic Control.

Ignitor plug – An electrical sparking device used to start the burning of the fuel-air mixture in a combustor.

In-flight BETA – PROHIBITED IN FLIGHT

Interstage Turbine Temperature – Temperature of hot gases at some intermediate position between multiple turbine wheels.

IOAT (OAT) - Indicated Outside Air Temperature (Outside Air Temperature). Ambient atmospheric temperature).

ITT – see Interstage Turbine Temperature

Integrated Electronic Control (IEC) – is a digital electronic control unit incorporating engine control, indication and data logging functions.

Jet pump – A fuel pump that uses Motive Flow to transfer fuel from one tank to another.

Labyrinth seal – A high speed seal, which produces interlocking passages to discourage the flow of air or oil from one area to another.

Lean flame out – occurs when the amount of fuel in the air-fuel mixture is being reduced until combustion is no longer supported.

Light-off – Slang for the beginning of combustion. It is the moment when ignition starts combustion, indicated by an increase in turbine temperature (EGT / ITT rise).

Low bypass ratio – is a classification within the turbofan engine group, which indicates that both the compressor and the fan have a mass airflow of equal values (1:1); see also Bypass ratio.

Margin – is excess thermodynamic shaft horse power (SHP). Engines are certified at a specific thermodynamic SHP rating at a specific maximum turbine temperature. Whenever that specific SHP can be attained at less than maximum turbine temperature, the engine has margin; (see also Flat rating).

Mass – A basic property of matter. Mass is referred to as weight when in the field of gravity such as that of the earth. For aeronautical computations, the standard unit of mass is the slug. Slug = Weight divided by g; i.e. weight/32.17.

Mass flow – airflow measured in slugs/second.

Maximum Continuous Power (MCP) – is authorized for aircraft certification and for emergency use at the discretion of the pilot, with no time limits. Unlimited periods of operation at MCP impacts engine wear rates and negatively affects direct engine maintenance costs.

Medium bypass ratio – a bypass ratio of about 2 – 3:1; see also Bypass ratio.

MOM – Manufacturers Operating Manual

Motive flow – is tapped-off, boosted fuel, which when forced through a venturi type orifice, creates a siphoning effect; thus, motive fuel can be used to transfer fuel from one tank to another tank.

NOTE - an operating procedure technique, etc., which warrants emphasis.

Nozzle (fuel) – A fuel nozzle is a device, which directs atomized fuel into a combustion chamber.

Nozzle (turbine) – Turbine stators.

NTS – (Negative Torque System) is an automatic drag reduction system.

NTS Checkout Solenoid – is used in systems that have negative torque system lockout and hydraulic propeller governor reset functions. The purpose of the solenoid is to prevent oil from flowing through the lockout rotary valve in the PPC when using the unfeather pump to put the propeller on the start locks. In some installations, an automatic start circuit controls the solenoid.

NTS LIGHT - if installed, illuminates when the oil pressure in the Prop Control System increases above a preset value.

NTS Lock-out – Prevents NTS activation when the power lever is below the Flight Idle position during a rejected takeoff and/or during reversing at a high speed landing roll.

NTS TEST - The negative torque created by the starter motor is used to check the negative torque sensing system. See Chapter 6.2 SYSTEM CHECK PROCEDURES.

OAT (IOAT) – Outside Air Temperature (Indicated Outside Air Temperature). Ambient atmospheric temperature).

OI or OIL - Operating Information Letter. See also Chapter 7.4 OILs, SILs, CSLs and PALs.

OI 331-11R4 – Dated November 20, 1998 addresses the proper use of engine inlet anti-ice and provides additional information on the use of engine ignition in icing conditions.

OI 331-14 – Dated March 18, 1996, addresses functional checks for the Negative Torque Sensing (NTS) system, prop feather valve and the fuel shutoff valve.

OIL VISCOSITY – see viscosity

OSFG – see Overspeed Fuel Governor.

Overspeed – A specific speed (RPM), which is in excess of the maximum allowable engine RPM limit.

Overspeed Fuel Governor – A flyweight-type, gear-driven safety device to control engine speed in the event of propeller governor malfunction. Excess engine speed produces OSFG flyweight action, which reduces fuel flow to oppose any engine speed increase.

Overtemperature – any time EGT / ITT exceeds the maximum allowable limits.

PA – see Pressure Altitude.

PAL – Pilot Advisory Letter. See also Chapter 7.4 OILs, SILs and PALs.

Performance augmentation – See Augmentation Options

PL – See Power Lever

PLA – Power Lever Angle (Measured from fuel reverse at 0º PLA to full maximum power ~ 100º PAL)

POH – Pilot Operating Handbook

Power Lever – The cockpit lever, which connects to the Manual Fuel Valve (MFV) and the Prop Pitch Control (PPC).

Pressure Altitude (PA) – PA is obtained by setting the altimeter to standard barometric pressure: 29.92 inches Hg, 1013.25 hPa, 1013.25 mb.

Probe – A sensing device that extends into the air stream or gas stream for the purpose of measuring temperature, pressure or velocity.

Propeller Blade Angle – is the angular measurement between the plane of rotation and the blade Chord Line at a specific blade station. The blade station is measured in inches from the propeller hub. See also Angle of attack (AOA) Propeller.

Ram pressure rise – Pressure rise in the inlet. This "ram rise" follows increasing forward speed of the aircraft.

Rapid response – Instantaneous power response, "…limited only by the time required by the propeller to react."[99]

Rich blow-out – refers to an interruption of combustion as a result of enot enough air in ratio to Wf (fuel flow).

Roll-down (spool down) – refers to the engine's RPM slowing down. See also Bog-down and droop.

Rotating group rub (damage) – Allowing the engine RPM to hang or "dwell" in the 18 to 28 percent RPM shaft critical range may result in a vibration, which causes erosion in the compressor shroud area.

[99]Quoted from TSG-134, April 1998, page 1-34.

RPM Lever – See Speed Lever.

Scavenge pump – A pump used to remove oil from bearing pockets or voids after the oil has been used for lubricating and cooling.

SFC – see Specific Fuel Consumption.

SFE – See Start Fuel Enrichment.

Shaft Horse Power (SHP) – is the available engine power to produce propeller thrust.

Shroud – A cover or housing used to aid in confining an air or gas flow to a desired path.

SIL – Service Information Letter. See also Chapter 7.4 OILs, SILs, CSLs and PALs.

Single Redline (SRL) – see SRL System

Slow Turn Propeller – when 100% = 1591, 1552, 1540 or 1390 RPM

Slug – Standard unit of mass flow used in aeronautical computations.

Specific Fuel Consumption (SFC) – The amount of fuel consumed to produce a given horsepower is known as "specific fuel consumption" or SFC. It indicates how efficiently power is extracted from the engine. SFC is measured in pounds of fuel per horsepower per hour (lbs/hp/hr). Conversely, SFC (lbs / hp / hr) x total hp = pounds per hour fuel flow.

Speed Lever (SL) - The cockpit lever, which connects to the Underspeed Fuel Governor (USFG) and the Prop Governor (PG).

Spool-down – see Roll-down.

SPR – see Start Pressure Regulator.

SRL System - The Single Red Line computer, automatically switches on at 80% RPM or higher, is used with the Exhaust Gas Temperature (EGT) indicating system and provides a constant temperature indication, which equates to maximum Turbine Inlet Temperature (TIT) under varying atmospheric conditions. (See also Section 4.11 SYSTEMS)

Start Fuel Enrichment (SFE) – automatically or manually (during manual mode starting) increases fuel flow and pressure at the fuel nozzle to assure adequate atomization for initial ignition ("Light off") and acceleration during engine start. Enrichment fuel flow rate varies through a "fixed" orifice. (See also Section 4.11 SYSTEMS)

Start locks – Mechanical latching device used to maintain the propeller at minimum prop blade angle during engine starting on the ground.

Start Pressure Regulator (SPR) – A "pressure regulated" manual fuel enrichment system, used to increase fuel flow and pressure at the fuel nozzle to assure adequate atomization for initial ignition ("Light-off") and acceleration during engine start. (See also Section 4.11 SYSTEMS)

Tailpipe temperature – See Exhaust Gas Temperature.

Takeoff Power – is limited to 5 minutes, once each flight; or as approved by the appropriate AFM, POH, MOM or other FAA approved manuals.

TBO – see Time Between Overhaul.

Thermal efficiency – Fuel energy available as opposed to work produced; usually expressed as a percentage.

Thermodynamic Shaft Horse Power – is the total available Shaft Horse Power (SHP) when operating at the maximum turbine temperature.

Thrust – The resulting force of a propeller along the line of its shaft; the forward force resulting from the reaction by the escaping gases produce in jet propulsion.

Time Between Overhaul – (TBO) is the time interval between overhaul periods, expressed in flight hours.

TIT – see Turbine Inlet Temperature.

Torque – A turning or twisting force.

TSG – Technical Study Guide; used during technical training sessions conducted by Honeywell Aerospace Training Solutions. See section 7.4 PILOT AND MAINTENANCE TRAINING.

Turbine Inlet Temperature (TIT) – Temperature of hot gases just prior to turbine entry (T4).

Turbojet – is a thrust producing turbine engine. The turbojet gets its propulsive power from the reaction to the flow of hot gases.

Turbofan – is a turbine engine that produces thrust by providing a compromise between the best feature of the turbojet and the turboprop. Turbofans are generally divided into three classifications: Low bypass, medium bypass, and high bypass.

Turboprop – is an application of the gas turbine engine with a propeller.

Turboshaft – is a gas turbine engine that delivers power through a shaft to operate something other than a propeller; for example: a Turboshaft provides power for a helicopter, a land vehicle or a ship.

Underspeed Fuel Governor (USFG) – A flyweight operated fuel metering device, housed in the fuel control, maintains engine RPM during Beta Mode of operations.

USFG – see Underspeed Fuel Governor

Very High bypass ratio – of 10:1 to 30:1 (see Bypass ratio).

Viscosity – It is the measurement of a fluid's resistance to flow. Kinematic viscosity is measured in stokes, expressed in square centimeters per second or more commonly centistokes (cSt), which is one-hundredth of a stoke. As the temperature of a liquid decreases the resistance of flow (viscosity) increases.

Variable Red Line – This system provides a variable EGT operation limit for all flight conditions with the engine speed above 80 percent RPM. See also section 4.11 Systems.

VRL – See Variable Red Line

WARNING – operating procedures, techniques, etc., which could result in personal injury or loss of life if not carefully followed.

Water-methanol injection system – increases inlet air density and cools combustion temperature, allowing additional fuel flow for enhanced engine power. (See also Section 4.11 SYSTEMS)

Wet engine – When activating the Water-methanol injection system, engine efficiency is based on "Wet" performance data. See also Dry engine.

9 INDEX

A

Abnormal Ops Procedures
- Abort when 61
- EEC or IEC manual mode 64
- Extreme cold weather ops 65
- High Residual ITT/EGT start 62
- Ops in icing 63
- Restart after an abort 61
- Shaft bow 62

Abort
- Engine start when 61
- Restart after an abort 61

Acceleration
- recommended engine starting rate 91

Address
- Pilot Advisor Group 2
- Training Solutions 87

Advantages
- Centrifugal compressor 9
- Single shaft engine 11

AFM
- Definition 91

AGL
- Definition 91

Air
- Ambient 91
- Mass flow 10

Airflow stations
- Definition 91
- Illustration 12

Airspeed
- Affecting EGT 18

Airstart
- Procedures 70

Angle of attack
- lowest 70
- Propeller 91

Annular combustor
- Definition 91
- Environmental facts 9

Anti-icing system
- Check procedures 44
- Description 24
- Illustration 24

AOG emergency service 84

Approach/landing
- Procedures 48

APR
- Definition 91
- Description 19
- Effects on SRL/VRL 20

APU
- When use recommended 65

Asymmetrical rigging
- Effects 73

Atomizer
- Definition 91
- Fuel nozzle 95

Augmentation systems
- APR 19
- CPR 19
- Water-Methanol 19

Automatic
- Enrichment 41
- Feathering system 14
- Ignition system 23
- Performance reserve
  - Glossary 91
- Performance reserve (APR) 19
- Propeller drag reduction 17
- SFE 18
- Speed switch 18
- Torque limiting 18

AvGas
- Emergency fueling 73

AWI
- Definition 91

Axial flow
- Compression ratio 10

B

Beta
- After landing 15

Beta mode
- Definition 92
- Follow-up 92
- Probited in flight 96
- WARNING 15

Blade
- Angle of attack 91
- Compressor 93
- Definition 93
- Propeller blade angle 99
- Turbine 35

Bleed-air
- Anti-ice system check 44
- Anti-icing system 24

Blowout
Definition 92
Flame out.....94
Boeing 720B
PHX Flight Test.....4
Bog down
Definition 92
Boost pump
Check fuel pressure 37
Braking effects .....See Propeller
Bypass indicator
Operational suggestions
Post flight inspection 50, 81
C
Caution.....See Rules of terms used
CAWI
Definition 92
Centrifugal compressor
Advantages of 9
Compression ratio.....10
Definition 92
Engine description 24
Operational principle 7
Other advantages.....9
Century series ..See Historical evolution
Certification
Considerations.....8
Maximum Continuous Power 97
TPE331 pilot tips 1
Use of flight test 4
CFR
Certification considerations 8
Definition 92
Clean burning .....See Environmental considerations
Cleared / deferred
Writeups 30
Clearing
Defined, Area, Motoring 93
Venting.....61
Clearing the engine.....61
Cliff Garrett.....3
Climb/Cruise
Normal Procedures.....47
Cold weather
Operations 65
Combustion Chamber
Operational principle 7
Combustor .....See Environmental considerations
Definition 93
Commitment
to TPE operators 83
Compression ratio
Description 10
Compressor
Compressor stall Stall resistance 10
Definitions.....93
Axial flow 92
Centrifugal flow 92
Compressor stall 93
Stage 93
Design advantages 9
Engine component 7
Environmental considerations 9
Inlet/Discharge 12
Preflight inspection.....33
Condition lever .....See Speed lever
Definition 93
Continuous combustion....See Operational principle
Continuous performance reserve
Definition 93
Description 19
Controlled descents
Advantages 11
Controls
EEC, IEC.....18
Engine, typical
After landing 15
Cooldown
Before shutdown.....49
Cooling
Hand rotation.....63
High residual ITT/EGT 62
Shaft bow.....62
Cost of ownership
Normal procedures 29
Operational suggestions 78
Course outline See Training
CPR .....See Continuous performance reserve

Critical speed
Definition 93
D
DA .....See Density Altitude
Deferred writeups
Preflight inspection 30
Density Altitude
Definition 93
Descent
Approach/Landing 48
Controlled 11
Operational suggestions 80
Description
General 6
Design
Advantages 11
Flow-through.....6
Modular 8
Single shaft 11
TPE331 6
Turbine nozzle.....7
Diffuser
Centrifugal flow compressor 92
Definition 94
Operational principles.....7
Dimensions
Weight & dimensions 25
Discrepancies
Operational suggestions 81
Post flight writeups 51
Disengaging / Re-engaging
Caution 62
Droop
Caution 60
Definition 94
Maximum during reverse 49
Roll-down 99
RPM during reverse 60
Start voltage 79
Voltage.....39
Dry engine
Definition 94
Dry sump
Lube system 21
Duty cycle
Ignition system 64
Dynamic balance
Maintainability 8
E
Economy
Operating the TPE331 17
EEC .....See Electronic Engine Control
EEC Manual Mode
Abnormal procedures 64
Efficiency
RPM design point 14
Superior performance 8
Thermal 101
Eggeling, Helmuth 2
EGT .....See Turbine temperature
Affected by 18
Correction chart 18
EGT(%), defined 94
Indicates combustion (light-off).....96
Single redline 19
Start limits 27
Variable redline 19
Electronic engine control
Definition 94
Description 18
Manual mode 64
Emergency shutdown
Procedures 69
Energy
Ignition system 23
Transfer heat to mechanical 7
Engine
Components.....7
FAA approved (AFM/POH).....1
General description.....14
Ownership costs 1
Testing 4
TPE331 3
Enrichment.....See Start Fuel Enrichment
Automatic 41
Automatic Performance Reserve 19
Continuous Performance Reserve 19
Limits during start.....41
Manual.....41
Normal Procedures 40
Start Pressure Regulator 101
Environmental considerations 9
Evolution .....See Historical evolution
Exhaust Gas Temperature .....See EGT
F
False start
Definition 94

Familiarization
Pilot training 85
FCU
Definition 95
Fuel system 22
In case of spline failure 69
Preflight inspection (P_2T_2) 33
Feather valve
Engine systems 14
Manual test 52
System check procedure.....51
Field Service Engineer .....See FSE
Filter bypass indicator
Fuel filter.....31
Lube system 22
Oil filter.....31
Post flight inspection 50
Preflight inspection.....31
Final authority.....1, 5, 29, 66
First turboprop
OV-10A 3
Fixed shaft.....See Single shaft
Flameout
Blowout 92
In icing.....64
Flat pitch
After landing 15
Operational suggestions
After landing 80
Preflight inspection.....32
Flat rating
Definition 94
Flight idle
Warning 67
Flight idle fuel flow
Maintenance test flight
Rate of descent 77
Flight in icing
Ignition system 64
Flight Test Facility 4
FOD
Definition 94
Resistance 10
FSE
AOG Service.....84
Fuel Control Unit.....See FCU
Fuel enrichment .....See Enrichment
Fuel flow
Affected by AWI 19
At flight idle 77
Controlled by
APR 19
CPR 19
EEC 18
IEC.....18
Power lever 15
USFG.....15
Indicator.....17
Fuel purge
Engine shutdown.....49
Fuel shutoff valve
System check procedures 51
Fuel system
Illustration 22
Fuel System
Description 22
Fuel/air mixture
Blowout 92
Operational principle 7
Fuel-efficient 9
G
Garrett, John Clifford
History 3
Gas generator
Engine components.....7
Gear box
Engine component 10
Generator assist start
Engine start procedures 42
GI.....See Ground idle
Glossary 91
Good performance
Recommended procedures 29
Ground idle 37, 48, 59
Guarding
Definition 95
H
Hand rotation
Post flight inspection 50
Preflight inspection.....33
Haring, Chad 2
High bypass
Definition 95
High residual ITT/EGT
Procedures 62
Historical evolution
TPE Family 3

History
Engine data 81
Honeywell 3
Honeywell
Company history.....3
First APU on passenger jet.....3
Flight Test Facility.....4
Maintenance test flight card.....74
Merger 3
Pilot advisor program
A focal point.....1
Burnie Rundall.....2
Chad Haring, Manager 2
Helmuth Eggeling 2
Support, Service & Training 83
Horsepower
Definition 95
relates to SFC 100
Shaft horse power 100
Hot/hung start
Definition 96
I
Icing conditions
Ice shedding.....63
Procedures.....63
Use of ignition 23, 45
when descending out of 64
Idle
Definition 95
IEC
auto feather 14
Definition 96
Description 18
Engine system.....14
Ignition system
Description 23
Ignitor plug, definition 96
Takeoff procedures 45
Types of modes 23
In-flight
Beta prohibited 15, 96
PAL PA331-06 16
engine shutdown 17
Performance monitoring.....82
Inlet
Airflow stations.....12
Delayed heat 63
FOD resistance 10
Heater limitation 63
Inspection 33
Sensors, checking 33
Up or down 24
Use of heater limits.....44
when to use heater 63
Installation drag
Performance 8
Instant response
Rapid response 80, 99
Instruments
Engine, typical 17
used for troubleshooting.....74
Integrated electronic control .....See IEC
Intermediate maintenance ....See Training
Interstage Turbine Temperature....See ITT
IOAT
Definition 96
ITT
Definition 96
Hich residual start.....62
Max enrichment 41
Max residual 38
Start limits 27
Turbine temperature 17
J
Jet A, etc.
Authorized turbine fuels 82
Jet pump
Definition.....96
Jet thrust.....6, 8
L
Labyrinth seal
Definition 96
Landing
Manual mode 65
Normal procedures 48
Lean
Blowout 92
Flame out.....96
Light-off
Definition 96
Limitations
Maximum RPM 27, 59
Start & Takeoff temperatures 27
Windmilling RPM 28
Low bypass
Defined 96
Lube systems
TPE331-1 through -12 21

TPE331-14A/B/F 21
TPE331-14GR/HR 22
TPE331-15AW 21
M
Maintainability.....8
Maintenance test flight
Feather valve test.....51
Phase 1.....76
Phase 2.....76
Phase 3.....76
Phase 4.....77
Procedures.....66
Test flight card.....89
Manual
Engine start procedures 62
Enrichment 41
Fuel enrichment – during airstart.....72
Manual mode
EEC, IEC.....64
Margin
Definition 96
Mass
Definition 97
Mass flow
affects EGT 20
Definition 27
effected by AWI 18
Slug 101
Maximum EGT/ITT
Adjustments.....20
Start & Takeoff 27
Maximum RPM
Operating limits 27
Medium bypass 97
Modular construction 9
Motive flow
Definition 97
Fuel system 23
Jetpump 96
Motoring (Clearing Engine) 93
N
Negative torque sensing .....See NTS
Normal ops procedures.....30
Note .....See Rules of terms used
Nozzle
Check AWI nozzle 33
Definition 97
Fuel nozzle
Definition 95
Fuel system 22
Turbine nozzle.....7
NTS
Auto drag reduction 17
Beta follow-up.....92
Certification considerations 8
Checkout solenoid 97
Definition 97
Functional check
OI331-14 98
Light.....97
Lock-out 98
System check (NTS test) 38, 54
Hydromechanical system 54
Supplemental check 56
Test is satisfactory if.....57
O
OAT
Definition 98
Oil
Checking bypass indicator 31
Checking level.....30
Effect of cold oil 60, 72
Effect of hot oil 60
Hot oil warning 31
Pressure/Temperature
Indicators.....17
Regulated/non-Regulated system.....21
Servicing 82
SOAP 82
Viscosity 102
OIL (OI)
Definition 98
Description 84
Oil/Fuel filter
Post flight inspection 50
Preflight inspection.....30, 31
On-site training 88
On-the-locks
Start locks 32
Operational
Features 17
Principle.....7
Suggestions 78
Operations
In extreme cold weather 65
Options.....24
Out of thin air
Footnote 3

Outside air temperature .....See OAT
Overspeed
Governor check.....43, 58
Note 58
OSG 98
Overtemperature
Definition 98
P
P_2T_2 Sensor
Preflight check 33
PA.....See Pressure altitude
PAL
Definition 98
Description 85
Performance augmentation
Definition 99
Descriptions.....19
Pilot advisors
Burnie Rundall 2
Chad Haring, Manager 2
Helmuth Eggeling.....2
Program 1
Pilot familiarization.....85
Pilot tips
Introduction 1
Pilot's engine 15
PL .....See Power Lever
PLA
Definition 99
Poor landing characteristics 73
Poppet
Fuel filter bypass.....31
Oil filter bypass.....31
Post flight inspection.....50
Power lever
Definition 99
Description 15
Illustration 16
Travel check 37
Power management
System description 14
System illustration 13
Power response
Advantages of single shaft 11
Must assure symmetry 73
Rapid, defined 99
Pre-century
TPE evolved from.....4
Preflight inspection 30
Pressure altitude
Definition 99
Pre-taxi/taxi checks 42
Probe
Definition 99
Product improvements 83
Prop shaft RPM
TPE331-1 through 12 25
TPE331-14/-15 25
Propeller
Blades on the lock.....32
Braking effects 11
Hand rotation.....33
Start locks release 43
R
Ram pressure rise
Definition 99
Ratings table 26
Reciprocating
Power response is similar 6
Recommended ops procedures.....29
Re-engaging starter
Caution 62
Reliability
Product improvement 84
Republic Helicopter
History 3
Residual fuel
Clearing procedures 61, 62
Restart
With high residual ITT/EGT 62
Reverse flow combustor 9
Reverse thrust 11
Rich blow-out
Definition 99
Rigging
mis-rigged feather valve
Warning 51
Rigging/Ground check 59
Roll-down
Check time 80
Definition 99
Rotating group rub
Definition 99
RPM
Critical range.....42
Indicator calibration 17

Lever
Description 16
Illustration 16
Operating limits 27, 59
Windmilling limits 28
Rules of terms used
Definitions.....29
Rundall, Burnie 2
S
Scavenge pumps
Definition 100
Lube system 21, 22
Separator ducts
Not required 10
Service centers.....83
Servicing Information.....82, 83
SFC .....See Specific fuel consumption
SFE
Auto/Manual 40, 41
Procedures 40
Start fuel enrichment definition.....101
Shaft bow
Description 62
Shaft horse power.....See Horsepower
Definition 100
TPE331 ratings 26
Short's Skyvan
TPE331 historical evolution.....3
SHP .....See Shaft horse power
Shroud
Definition 100
Shutdown in flight
Emergency shutdown procedures 69
Simplicity
Design description 8
Low cost manufacture 10
Simplified procedure 17
Single redline
Description 19
SRL system definition 100
Single shaft 7
Advantages 11
Slug
Definition 100
SOAP
Operational suggestions 82
Specific Fuel Consumption
Definition 100
TPE331 ratings 26
Specs & performance 25
Speed lever .....See Condition lever
Definition 100
Description 15, 16
Illustration (RPM lever) 16
Split engines parameters.....73
See Maintenance test flight 73
Spool down .....See Roll-down
SRL .....See Single redline
Augmentation adjustments.....20
Check sensor 33
Stall resistance
Centrifugal compressor 10
Start Fuel Enrichment
Definition 101
Start locks
Definition 101
Propeller blades
Preflight inspection.....32
Start pressure regulator
Definition 101
Starter not required
During airstart 18
Starting
Envelope 70
Extreme cold weather.....65
Monitor voltage droop 79
Normal procedures 36
Electric Rating caution 30
Strain gage
Supplementary NTS check 56
Torque sensing 17
Superior installed performance
Description 8
Support, service & training 83
Swearingen, Ed
Historical evolution.....3
Symmetrically rigged .....
.....See Maintenance test flight
Systems
Check procedures 51
Description 18
Engine indicators 17, 18
Performance augmentation.....19
T
Tailpipe temperature .....See EGT
Takeoff
Limitations 27
Normal procedures 45

Performance computations.....44
Power, defined.....101
TPE331 ratings 26
TBO
Definition 101
Maintainability 8
Temperature indication systems
Gas turbine engines 18
Test flight .....See Maintenance test flight
Procedures.....66, 73
Thermal
Efficiency, defined 101
Lockout, Oil filter bypass.....31
Stabilization after landing.....80
Thermodynamic SHP
Definition 101
Margin 96
Thrust .....See Shaft horse power
Definition 101
Turbofan, defined 102
Turbojet, defined.....102
Turboprop, defined 102
Time between overhaul .....See TBO
TIT.....See Turbine inlet temperature
Torque
Definition 102
NTS description 17
Units of torque 17
TPE331
-12 cross section 6
-14/-15 cross section.....6
-14/-15 modular design.....9
Airflow stations.....12
AOG emergency service 84
Certification considerations 8
Components illustration 7
Description 6
Design advantages 9
Design description 6
EEC on -8,-10N,-12B.....18
Engine systems 14
Environmental considerations 9
Evolution 3
FOD resistance 10
History 3
IEC.....18
ITT/EGT limitations.....27
Maintainability 8
Modular construction 9
Operational Principal 7
Ops procedures 29
Performance 8
Pilot advisor.....2
Pilot tips.....1
Power lever 16
Power management system 13
Ratings.....26
Specs & performance 24
Speed lever 16
Support, service & training 83
Test flight card.....89
Torque producing engine 7
Training 83
Course outline 87
Grades & evaluation 87
Intermediate Maintenance 86
Line Maintenance 86
Location.....87
Operational suggestions 78
Pilot familiarization 85
Pilots & Technicians 85
Registrar
Address & phone numbers.....87
Training Solutions.....87
Trimming an airplane in flight
Techniques.....74
Troubleshooting.....81
Tt2 Sensor
Preflight inspection.....33
Turbine inlet temperature
Definition 102
Turbine shaft RPM
331-1 through -12 25
331-14/-15 25
Turbine temperature
Check residual.....38
Engine instruments 17
Indication adjustments 20
Indicators.....17
Interstage 96
Maximum for takeoff 27
Rate during start 39, 40
Single redline (SRL).....19
Variable redline (VRL).....19
Turbofan
Bypass ratio definition 92
Definition 102
Turbojet and turboprop.....102

Turbojet
Definition 102
Turboprop .....See TPE331
Basis for TFE731 3
Definition 102
First production TPE331 3
Turboshaft
Definition 102
U
Underspeed fuel governor
Definition 102
Set with speed lever 100
Unfeathering pump is used for
Airstart.....68
NTS check.....55
unfeathering.....32
USFG.....See Underspeed Fuel Governor
V
Variable Redline
Definition 102
Description 19
Variable RPM
Opeartional features 18
Venting engine
Restarting consideration.....61
Vibration
Critical speed 42, 93
Dynamic balance.....8
Voltage and amperage
Battery/GPU 36
GPU settings 30
VRL.....See Variable Redline
W
Warning .....See Rules of terms used
Water-methanol injectionSee AWI & CAWI
Augmentation options, defined 91
Weight & Dimensions.....25
Wet engine .....See also Dry engine
Definition 103
Z
Zero thrust
Power lever set ground idle 16

Honeywell

PA02-3203
May 2004
Printed in U.S.A. on Recycled Paper
© 2004 Honeywell International Inc.

www.HoneywellAerospace.com

Engines, Systems & Services
Honeywell
1944 Sky Harbor Circle
Phoenix, AZ 85034
Domestic Tel 800-421-2133
Int'l Tel: 602-365-2180